MultiAir MA 4000
MultiAir MA FC 4000
MultiAir MA FCE 4000

High pressure blower

Spare parts list

KONGSKILDE
Air solutions / your success

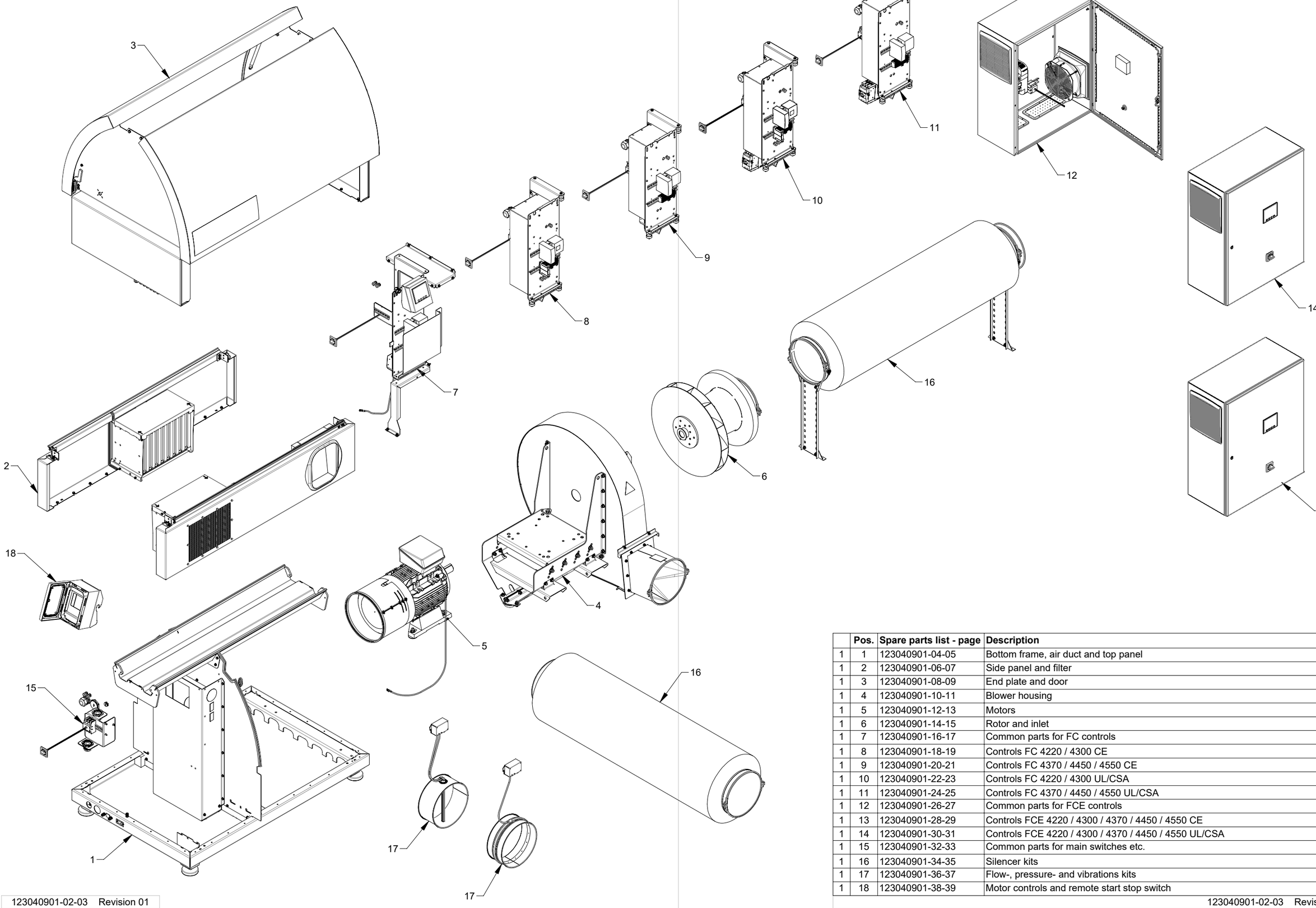

123040901-02-03 Revision 01

	Pos.	Spare parts list - page	Description
1	1	123040901-04-05	Bottom frame, air duct and top panel
1	2	123040901-06-07	Side panel and filter
1	3	123040901-08-09	End plate and door
1	4	123040901-10-11	Blower housing
1	5	123040901-12-13	Motors
1	6	123040901-14-15	Rotor and inlet
1	7	123040901-16-17	Common parts for FC controls
1	8	123040901-18-19	Controls FC 4220 / 4300 CE
1	9	123040901-20-21	Controls FC 4370 / 4450 / 4550 CE
1	10	123040901-22-23	Controls FC 4220 / 4300 UL/CSA
1	11	123040901-24-25	Controls FC 4370 / 4450 / 4550 UL/CSA
1	12	123040901-26-27	Common parts for FCE controls
1	13	123040901-28-29	Controls FCE 4220 / 4300 / 4370 / 4450 / 4550 CE
1	14	123040901-30-31	Controls FCE 4220 / 4300 / 4370 / 4450 / 4550 UL/CSA
1	15	123040901-32-33	Common parts for main switches etc.
1	16	123040901-34-35	Silencer kits
1	17	123040901-36-37	Flow-, pressure- and vibrations kits
1	18	123040901-38-39	Motor controls and remote start stop switch

123040901-02-03 Revision 01

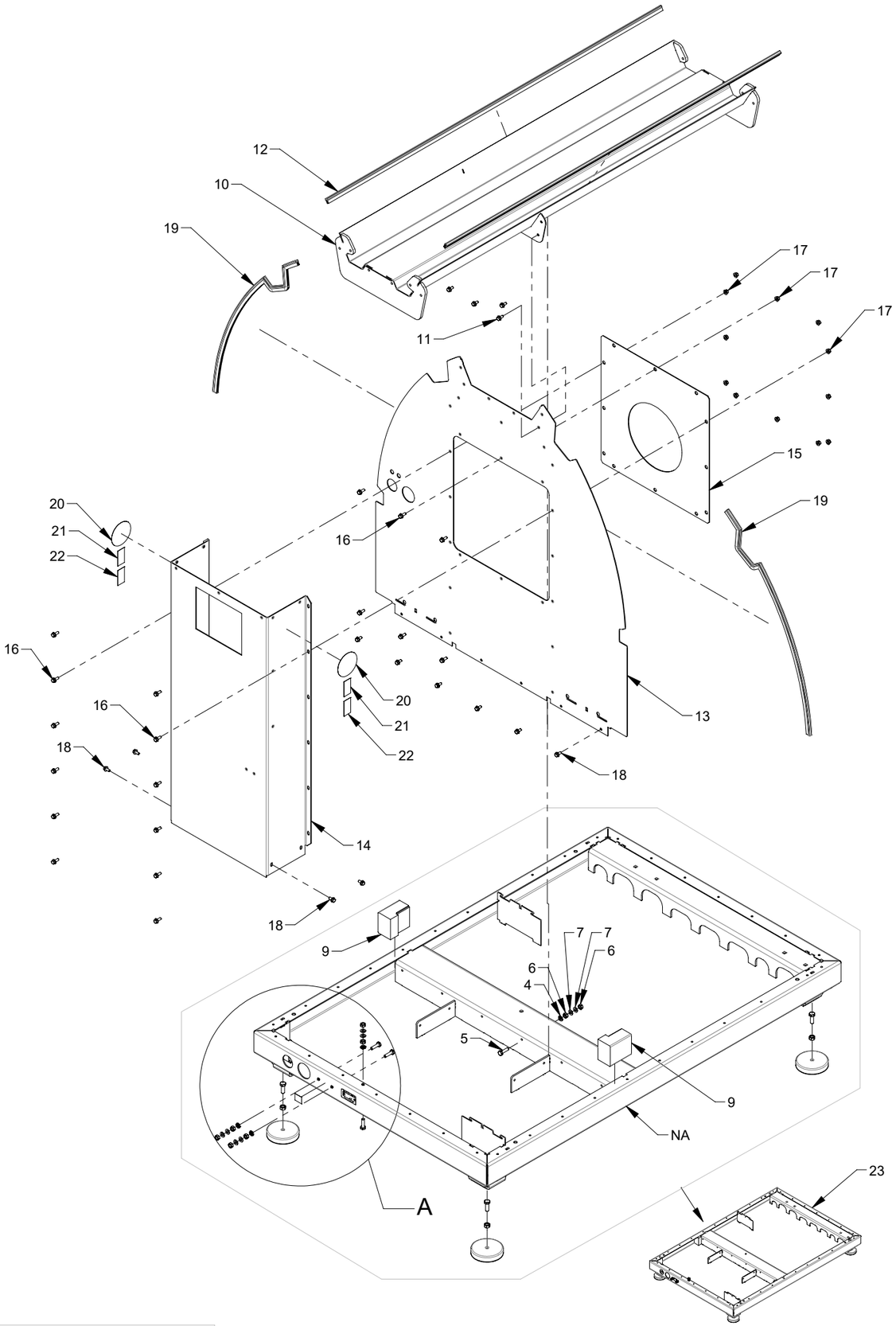

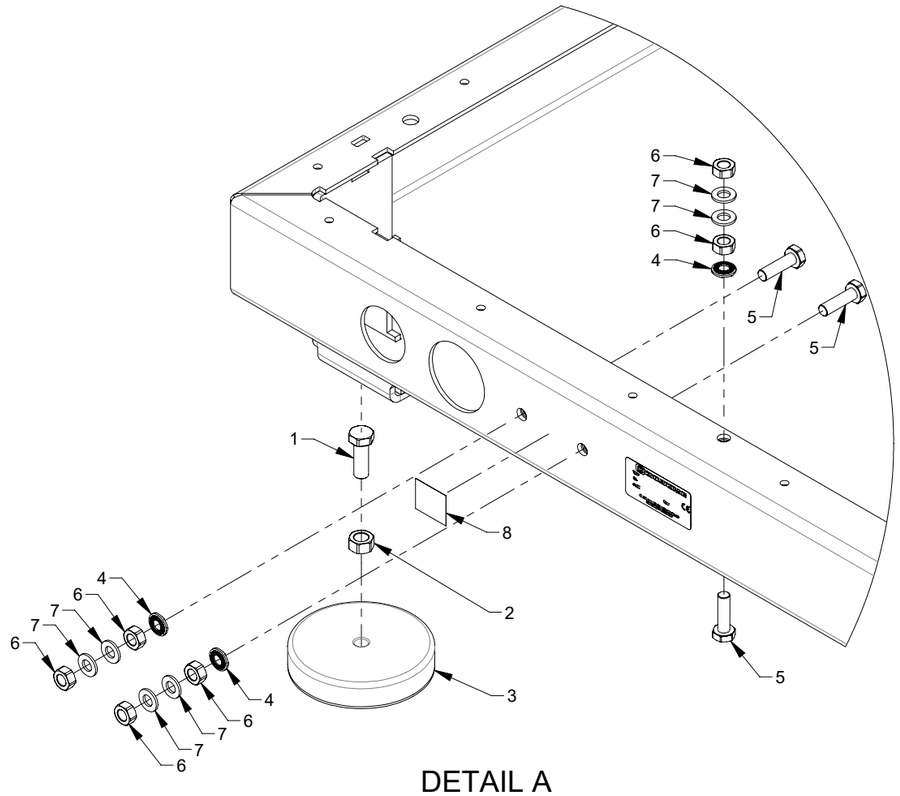

DETAIL A

Pos.	Pcs.	Part no.	Description
1	4	100304033	Set screw M12x35 DIN 933
2	4	100315016	Nut M12 DIN 934
3	4	100323457	Vibrations damper Ø120x35 600daN
4	8	100332024	Contact washer M10
5	4	100304024	Set screw M10x35mm DIN 933, elgalvanized
6	8	100315013	M10 DIN 934
7	8	100331006	Washer M10 DIN 125 A
8	1	123020322	Label "Ground potential equalization", black on silver
9	2	123040108	Insulation for bottom frame
10	1	123040126	Back
11	6	100323453	Thread cutting screw M8x16 DIN 7500D
12	2	123040168	Sealing for side panel and back
13	1	123040171	Middle bulkhead
14	1	123040172	Air guide
15	1	123040180	Cover plate for middle bulkhead
16	18	100323454	M8x20 DIN 7500D
17	12	100316108	Flangenut with threadlock M8 DIN 6927 Elgv.
18	10	100323453	Thread cutting screw M8x16 DIN 7500D
19	2	123040178	Sealing for middle bulkhead
20	2	121000834	Label "Wear ear protection" Ø100, white on blue
21	2	121115071	Label "Read users manual", black on yellow
22	2	121115073	Label "Disconnect electricity before service", black on yellow
23	1	123040100	Bottom frame assembled

123040901-04-05 Revision 01

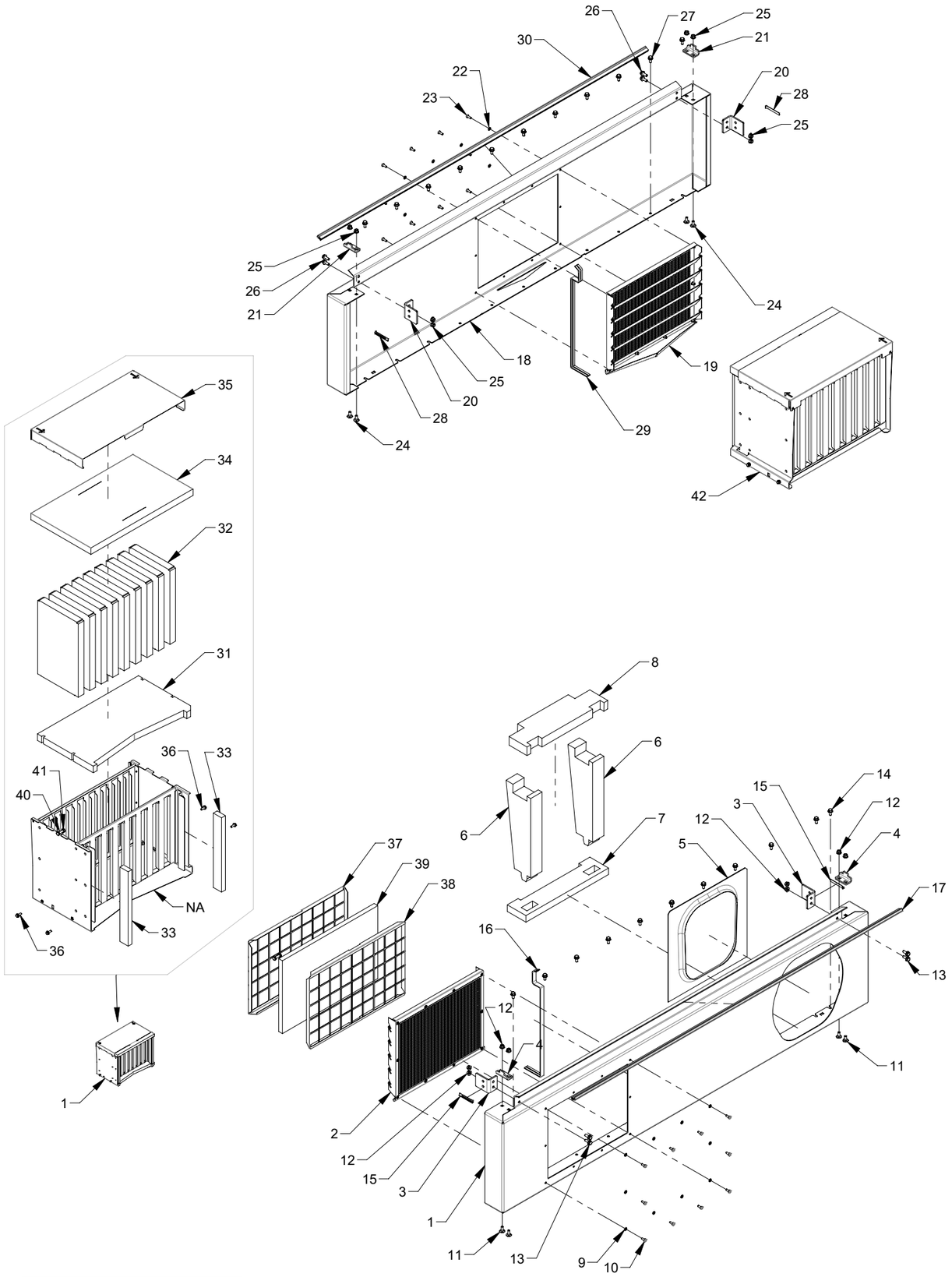

123040901-06-07 Revision 01

KONGSKILDE
Air solutions / your success

Pos.	Pcs.	Part no.	Description
1	1	123040120	Side panel with 2 holes
2	1	123040173	Net for sidepanel assembled
3	2	123040165	Assembly bracket for side panel and gable
4	2	123040142	Locking bracket
5	1	123040163	Rubber sealing for blower outlet
6	2	123040327	Side insulation for blower outlet
7	1	123040326	Bottom insulation for blower outlet
8	1	123040328	Top insulation for blower outlet
9	10	100350027	Washer M6 A2
10	10	100350038	Pan head screw M6x16 X30 stainless ISO 14583
11	4	100311040	Carriage bolt M8x20 DIN 603 St. 8.8
12	8	100316108	Flangenut with threadlock M8 DIN 6927 Elgv.
13	4	100323380	Flange set screw M8 x 20mm DIN 6921, elgalvanized
14	12	100323453	Thread cutting screw M8x16 DIN 7500D
15	2	123040166	Sealing for assembly bracket
16	1	123040167	Sealing between side panel and middle bulkhead
17	1	123040168	Sealing for side panel and back
18	1	123040121	Side panel with 1 hole
19	1	123040173	Net for sidepanel assembled
20	2	123040165	Assembly bracket for side panel and gable
21	2	123040142	Locking bracket
22	10	100350027	Washer M6 A2
23	10	100350038	Pan head screw M6x16 X30 stainless ISO 14583
24	4	100311040	Carriage bolt M8x20 DIN 603 St. 8.8
25	8	100316108	Flangenut with threadlock M8 DIN 6927 Elgv.
26	4	100323380	Flange set screw M8 x 20mm DIN 6921, elgalvanized
27	12	100323453	Thread cutting screw M8x16 DIN 7500D
28	2	123040166	Sealing for assembly bracket
29	1	123040167	Sealing between side panel and middle bulkhead
30	1	123040168	Sealing for side panel and back
31	1	123040154	Bottom insulation for noise lock
32	9	123040155	Insulation plate for noise lock
33	2	123040156	Side insulation for noise lock
34	1	123040157	Top insulation for noise lock
35	1	123040158	Top lid for noise lock
36	4	100323398	Flange head screw M6x16 EN 1665, elgalvanized
37	1	123040160	Net A for filter
38	1	123040161	Net B for filter
39	1	123040162	Filter for noise lock
40	2	100306017	Set screw M8x30 DIN 933
41	2	100316003	Self locking nut M8 DIN 985-6, elgalvanized
42	2	123040150	Noise lock assembled

123040901-06-07 Revision 01

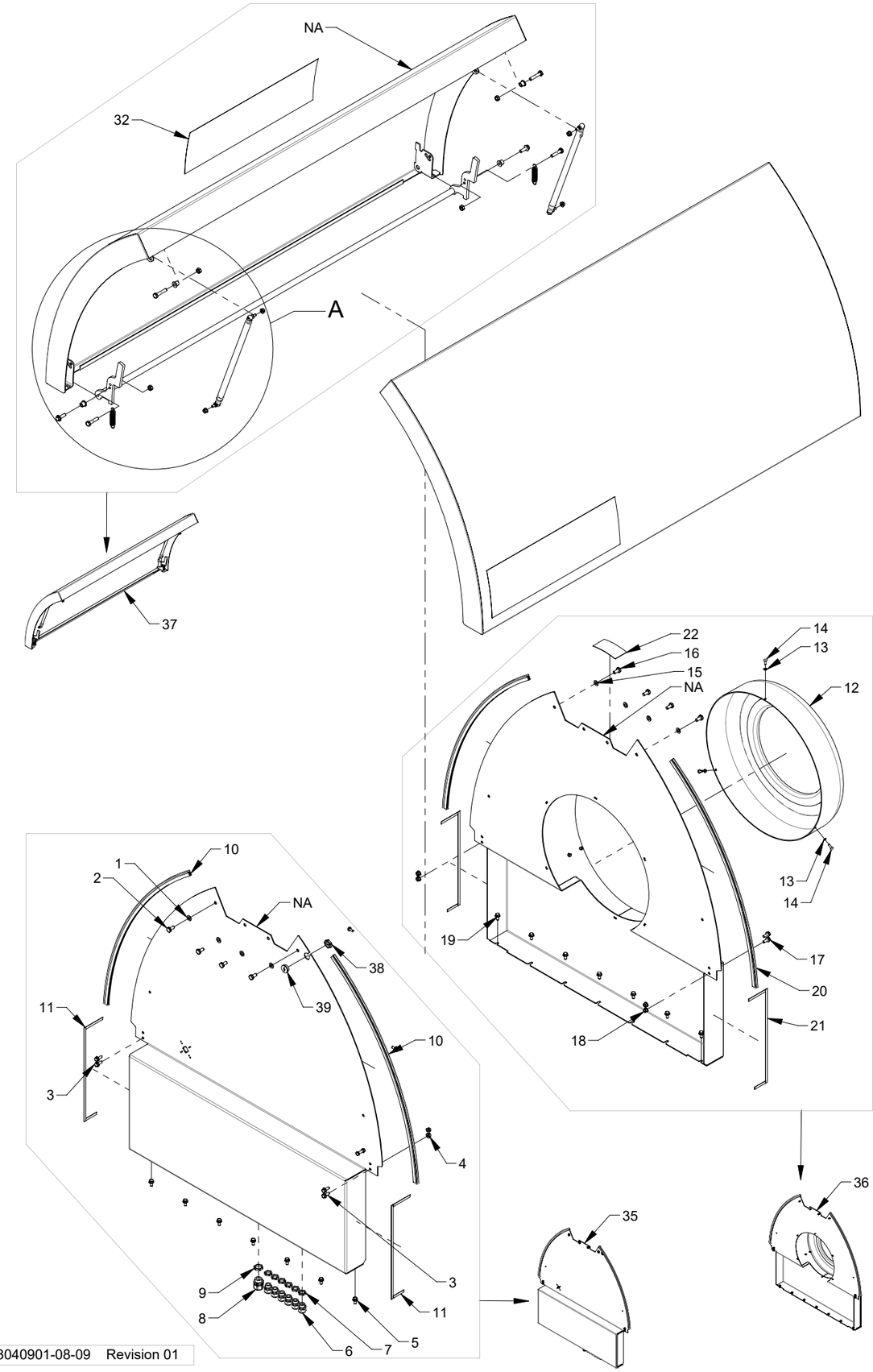

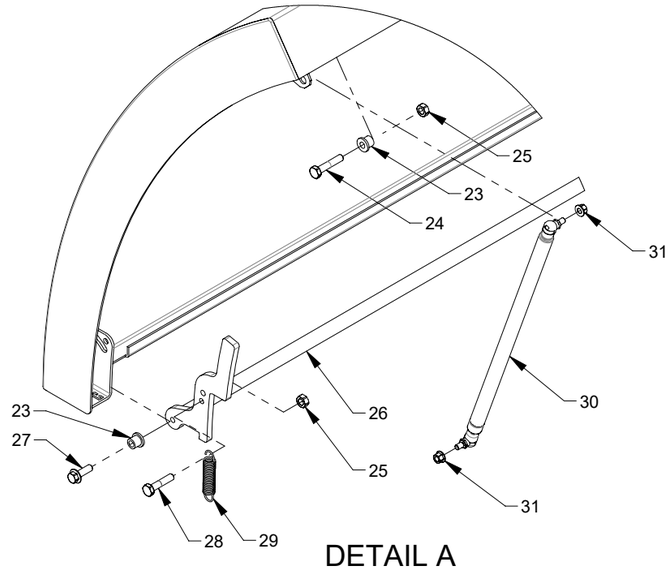

DETAIL A

Pos.	Pcs.	Part no.	Description
1	4	100350510	Washer M10 DIN 125-A A4
2	4	100350527	Screw M10x20 DIN 933 A4
3	4	100323380	Flange set screw M8 x 20mm DIN 6921, elgalvanized
4	4	100316108	Flangenut with threadlock M8 DIN 6927 Elgv.
5	7	100323453	Thread cutting screw M8x16 DIN 7500D
6	6	100511260	Cable screw gland M20x1,5
7	6	100511215	Nut M20X1,5 plastic
8	1	100511182	Cable screw gland M25x1,5 plastic
9	1	100511191	Nut M25 x 1,5 plastic
10	2	123040141	Sealing for gable
11	2	123040145	Sealing between side panel and gable
12	1	123040355	Plastic cap for air intake, mounted
13	3	100350027	Washer M6 A2
14	3	100350038	Pan head screw M6x16 X30 stainless ISO 14583
15	4	100350510	Washer M10 DIN 125-A A4
16	4	100350527	Screw M10x20 DIN 933 A4
17	4	100323380	Flange set screw M8 x 20mm DIN 6921, elgalvanized
18	4	100316108	Flangenut with threadlock M8 DIN 6927 Elgv.
19	7	100323453	Thread cutting screw M8x16 DIN 7500D
20	2	123040141	Sealing for gable
21	2	123040145	Sealing between side panel and gable
22	1	121109322	Label "Risk of cutting / stop", black/red on yellow
23	4	100201034	Bronze bushing Ø10/16 L=16mm SMS779
24	2	100306034	M10x50 DIN 931
25	4	100315013	M10 DIN 934
26	1	123040137	Locking arm
27	2	100308173	Flange set screw M10x30mm DIN 6921, elgalvanized
28	2	100306033	M10x45 DIN 931
29	2	122000570	Spring 80xØ18 externally, 26 windings
30	2	100323456	Gas spring
31	4	100316108	Flangenut with threadlock M8 DIN 6927 Elgv.
32	1	123040950	Label "KONGSKILDE MultiAir 4000", blue/black on transparent
33	2	100306017	Set screw M8x30 DIN 933
34	2	100316003	Self locking nut M8 DIN 985-6, elgalvanized
35	1	123040117	Gable for motor side assembled
36	1	123040118	Gable for blower side assembled
37	1	123040130	Door assembled
38	2	100511191	Nut M25 x 1,5 plastic
39	1	100511274	Blind plug M25x1,5 plastic
40	2	100323450	Thread cutting screw M6x16 DIN 7500D

123040901-08-09 Revision 01

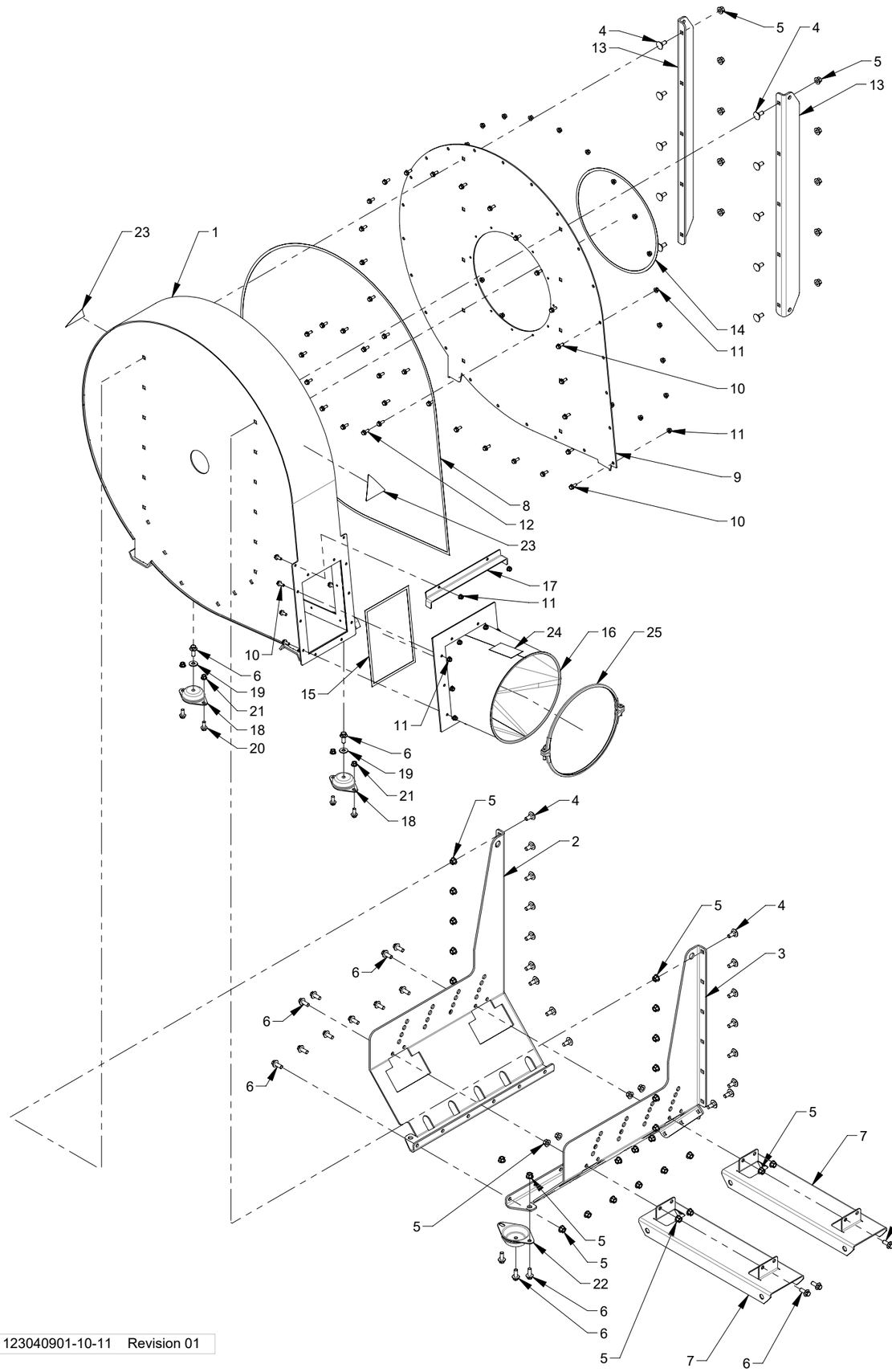

123040901-10-11 Revision 01

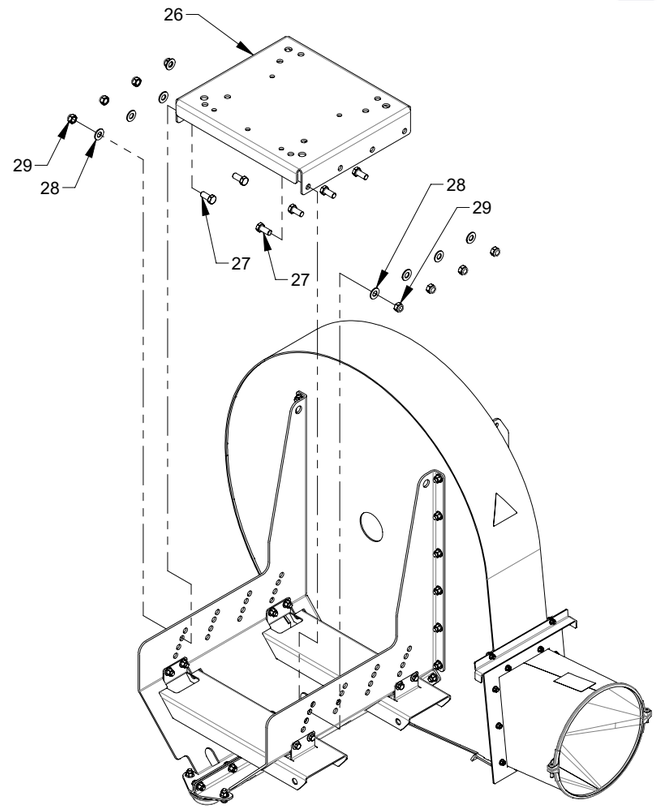

Pos.	Pcs.	Part no.	Description
1	1	123040310	Blower housing
2	1	123040315	Half part A for blower console
3	1	123040316	Half part B for blower console
4	28	100311038	Carriage bolt M12 x 30mm DIN 603, elgalvanized
5	44	100316109	Flangenut with threadlock M12 DIN6927 elgalvanized
6	19	100308207	M12x30 DIN 6921
7	2	123040340	Profile for fork lifter
8	1	123040342	Sealing for front plate
9	1	123040341	Front plate for blower housing
10	36	100323380	Flange set screw M8 x 20mm DIN 6921, elgalvanized
11	36	100316108	Flangenut with threadlock M8 DIN 6927 Elgv.
12	12	100323454	M8x20 DIN 7500D
13	2	123040309	Brace for front plate
14	1	123040343	Sealing for air intake
15	1	123040325	Sealing for blower outlet
16	1	123040321	Blower outlet
17	1	123040329	Locking bracket for insulation
18	2	100323427	Vibration damper
19	2	100331101	Washer M12 BN 737
20	4	100323438	Flange set screw M10 x 25mm DIN 6921, elgalvanized
21	4	100316102	Flangenut with threadlock M10 DIN 6927
22	1	100323466	Vibration damper
23	2	121151202	Label "Hot surface" 100mm, black on yellow
24	1	121109322	Label "Risk of cutting / stop", black/red on yellow
25	1	125500331	FK 350 bolt clamp, wide, 2 mm, galvanized
26	1	123040320	Motor plate
27	8	100306054	M16x35 DIN 933
28	11	100331012	Washer M16, elgalvanized
29	12	100316006	Lock nut M16 DIN 985-6

123040901-10-11 Revision 01

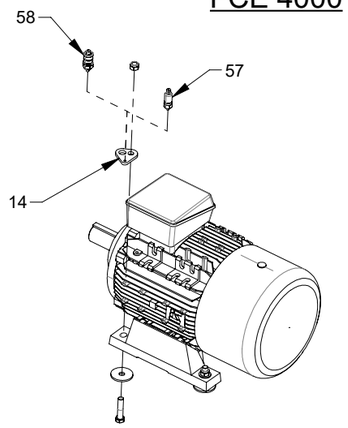

4000 FC 4000 FCE 4000

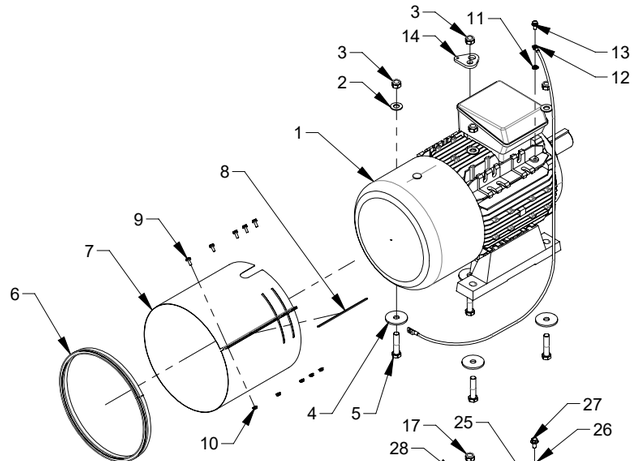

4300
FC 4220
FCE 4220

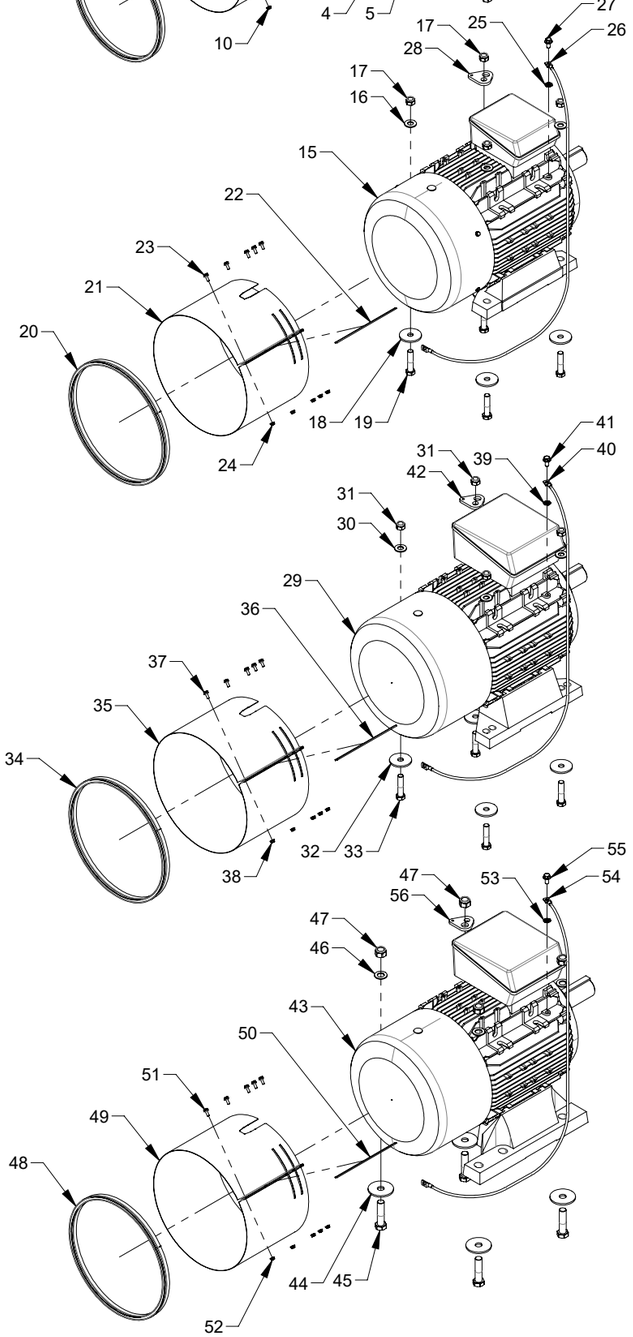

4370
FC 4300
FCE 4300

4450
FC 4370
FC 4450
FCE 4370
FCE 4450

4550
FC 4550
FCE 4550

KONGSKILDE
Air solutions / your success

Pos.	Pcs.	Part no.	Description
1	1	100501332	AC Motor 200L-2p B3 30(34)kW 3x400/690(460)V 50(60)Hz IE3 UL/CSA PTC
2	3	100331012	Washer M16, elgalvanized
3	4	100316006	Lock nut M16 DIN 985-6
4	4	121121079	Washer for blower shaft
5	4	100306059	M16x70 DIN931
6	1	123040334	Sealing for cooling duct, for motor 30kW
7	1	123040331	Cooling duct for motor 30kW
8	1	123040337	Sealing for assembly of cooling duct, for motor 30kW
9	5	100323398	Flange head screw M6x16 EN 1665, elgalvanized
10	5	100316075	Flange nut with threadlock M6 DIN 6927
11	1	100332023	Contact washer M8
12	1	123040222	Ground wire with terminal for motor 30kW assembled
13	1	100323387	Flange set screw M8x16 DIN 6921
14	1	123040232	Bracket for vibration sensor
15	1	100501333	AC Motor 200L-2p B3 37(42)kW 3x400/690(460)V 50(60)Hz IE3 UL/CSA PTC
16	3	100331012	Washer M16, elgalvanized
17	4	100316006	Lock nut M16 DIN 985-6
18	4	121121079	Washer for blower shaft
19	4	100306059	M16x70 DIN931
20	1	123040335	Sealing for cooling duct, for motor 37kW, 45kW, 55kW
21	1	123040332	Cooling duct for motor 37kW, 45kW, 55kW
22	1	123040338	Sealing for assembly of cooling duct, for motor 37kW, 45kW, 55kW
23	5	100323398	Flange head screw M6x16 EN 1665, elgalvanized
24	5	100316075	Flange nut with threadlock M6 DIN 6927
25	1	100332024	Contact washer M10
26	1	123040224	Ground wire with terminal for motor 37kW, 45kW, 55kW assembled
27	1	100323439	Flange set screw M10x20 DIN 6921
28	1	123040232	Bracket for vibration sensor
29	1	100501334	AC Motor 225M-2p B3 45(52)kW 3x400/690(460)V 50(60)Hz IE3 UL/CSA PTC
30	3	100331012	Washer M16, elgalvanized
31	4	100316006	Lock nut M16 DIN 985-6
32	4	121121079	Washer for blower shaft
33	4	100306059	M16x70 DIN931
34	1	123040335	Sealing for cooling duct, for motor 37kW, 45kW, 55kW
35	1	123040332	Cooling duct for motor 37kW, 45kW, 55kW
36	1	123040338	Sealing for assembly of cooling duct, for motor 37kW, 45kW, 55kW
37	5	100323398	Flange head screw M6x16 EN 1665, elgalvanized
38	5	100316075	Flange nut with threadlock M6 DIN 6927
39	1	100332024	Contact washer M10
40	1	123040224	Ground wire with terminal for motor 37kW, 45kW, 55kW assembled
41	1	100323439	Flange set screw M10x20 DIN 6921
42	1	123040232	Bracket for vibration sensor
43	1	100501335	AC Motor 250M-2p B3 55(63)kW 3x400/690(460)V 50(60)Hz IE3 UL/CSA PTC
44	4	123040373	Washer M20 for rotor
45	4	100306069	M20x80 DIN931
46	3	100331009	Washer M20
47	4	100316007	Locking nut M20 DIN 985-6, elgalvanized
48	1	123040335	Sealing for cooling duct, for motor 37kW, 45kW, 55kW
49	1	123040332	Cooling duct for motor 37kW, 45kW, 55kW
50	1	123040338	Sealing for assembly of cooling duct, for motor 37kW, 45kW, 55kW
51	5	100323398	Flange head screw M6x16 EN 1665, elgalvanized
52	5	100316075	Flange nut with threadlock M6 DIN 6927
53	1	100332024	Contact washer M10
54	1	123040224	Ground wire with terminal for motor 37kW, 45kW, 55kW assembled
55	1	100323439	Flange set screw M10x20 DIN 6921
56	1	123040232	Bracket for vibration sensor
57	1	123040062	MultiAir FC/FCE 4000 Vibration sensor including wire
58	1	123040063	MultiAir 4000 Vibration sensor kit inclusive wire

FC 4220M
FCE 4220M

4300M
4370M
4450M
FC 4300M
FC 4370M
FC 4450M
FCE 4300M
FCE 4370M
FCE 4450M

4550M
FC 4550M
FCE 4550M

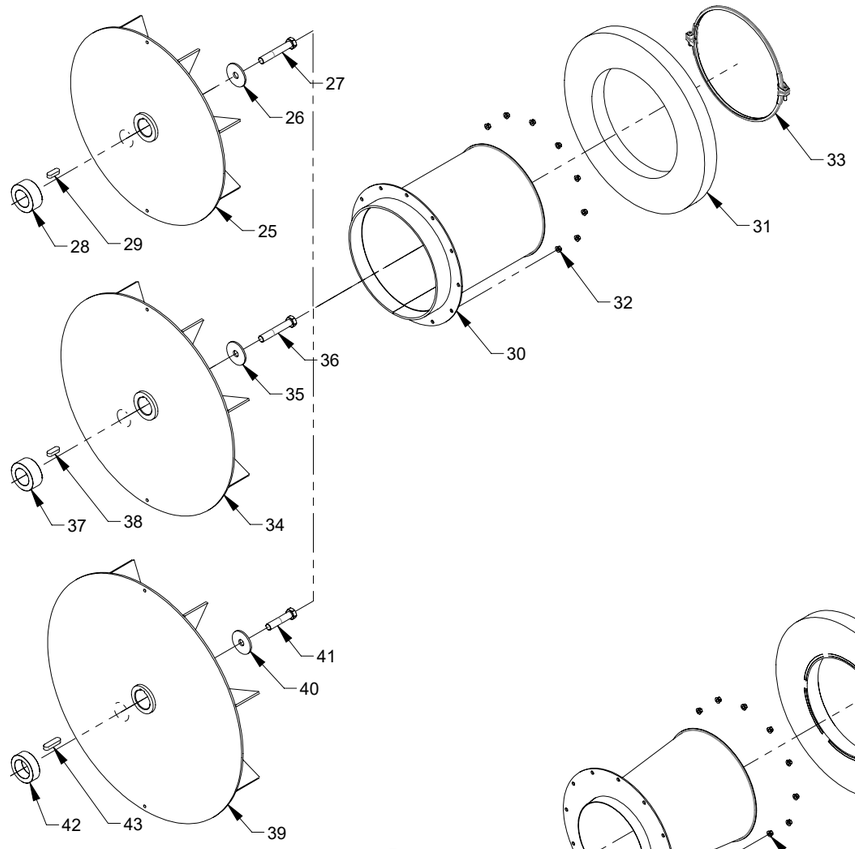

FC 4220P
FCE 4220P

4300P
4370P
4450P
FC 4300P
FC 4370P
FC 4450P
FCE 4300P
FCE 4370P
FCE 4450P

4550P
FC 4550P
FCE 4550P

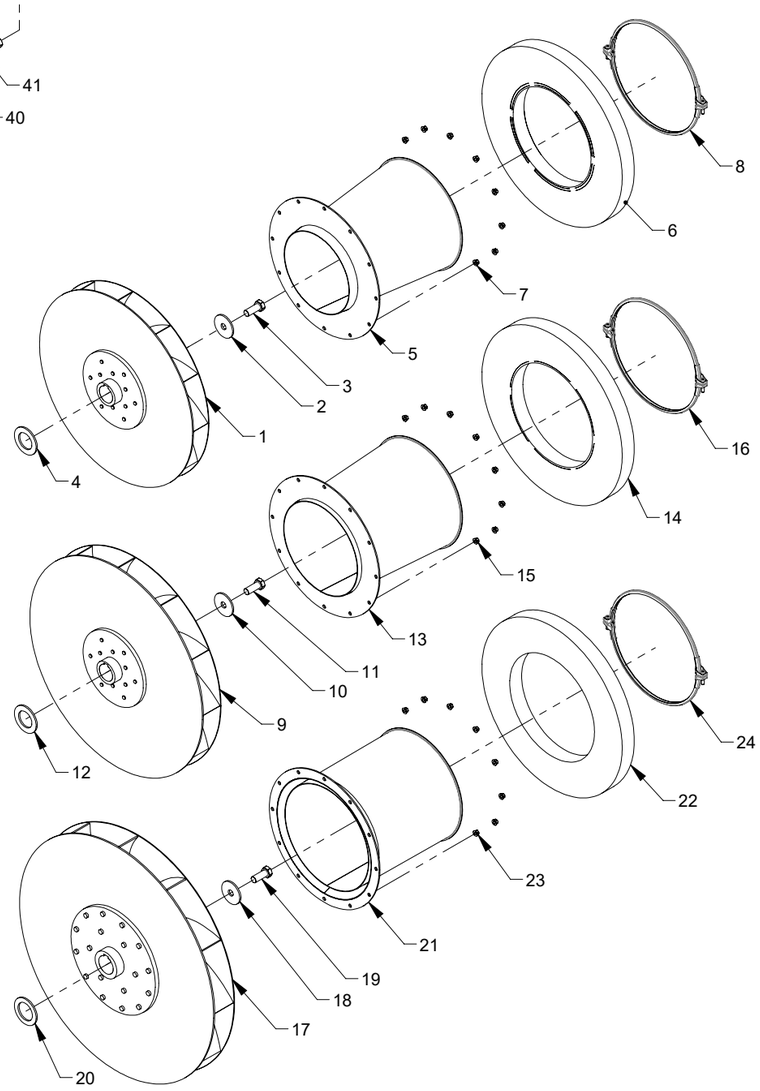

KONGSKILDE
Air solutions / your success

Pos.	Pcs.	Part no.	Description
1	1	123040385	Rotor P Ø630-Ø55 LG
2	1	123040373	Washer M20 for rotor
3	1	100306065	M20x50 DIN 933
4	1	123040383	Spacer for Ø55 shaft
5	1	123040387	P-intake welded Ø630
6	1	123040348	Insulation for inlet
7	12	100316108	Flangenut with threadlock M8 DIN 6927 Elgv.
8	1	125500331	FK 350 bolt clamp, wide, 2 mm, galvanized
9	1	123040361	Rotor P Ø710-Ø55 LG
10	1	123040373	Washer M20 for rotor
11	1	100306065	M20x50 DIN 933
12	1	123040383	Spacer for Ø55 shaft
13	1	123040345	P-intake welded Ø710
14	1	123040348	Insulation for inlet
15	12	100316108	Flangenut with threadlock M8 DIN 6927 Elgv.
16	1	125500331	FK 350 bolt clamp, wide, 2 mm, galvanized
17	1	123040364	Rotor P Ø800-Ø60 LG
18	1	123040373	Washer M20 for rotor
19	1	100306065	M20x50 DIN 933
20	1	123040384	Spacer for Ø60 shaft
21	1	123040349	P-intake welded Ø800
22	1	123040348	Insulation for inlet
23	12	100316108	Flangenut with threadlock M8 DIN 6927 Elgv.
24	1	125500331	FK 350 bolt clamp, wide, 2 mm, galvanized
25	1	123040420	Rotor M Ø630-Ø55
26	1	123040373	Washer M20 for rotor
27	1	100306068	M20x120 DIN931
28	1	123040434	Bushing for Ø55 blower shaft L=39
29	1	100405047	KEY A16x10x45 DIN 6885
30	1	123040350	M-intake welded
31	1	123040348	Insulation for inlet
32	12	100316108	Flangenut with threadlock M8 DIN 6927 Elgv.
33	1	125500331	FK 350 bolt clamp, wide, 2 mm, galvanized
34	1	123040421	Rotor M Ø710-Ø55
35	1	123040373	Washer M20 for rotor
36	1	100306068	M20x120 DIN931
37	1	123040434	Bushing for Ø55 blower shaft L=39
38	1	100405047	KEY A16x10x45 DIN 6885
39	1	123040422	Rotor M Ø800-Ø60
40	1	123040373	Washer M20 for rotor
41	1	100306117	M20x90 DIN931
42	1	123040435	Bushing for Ø60 blower shaft L=29
43	1	100405048	KEY A18x11x63 DIN 6885

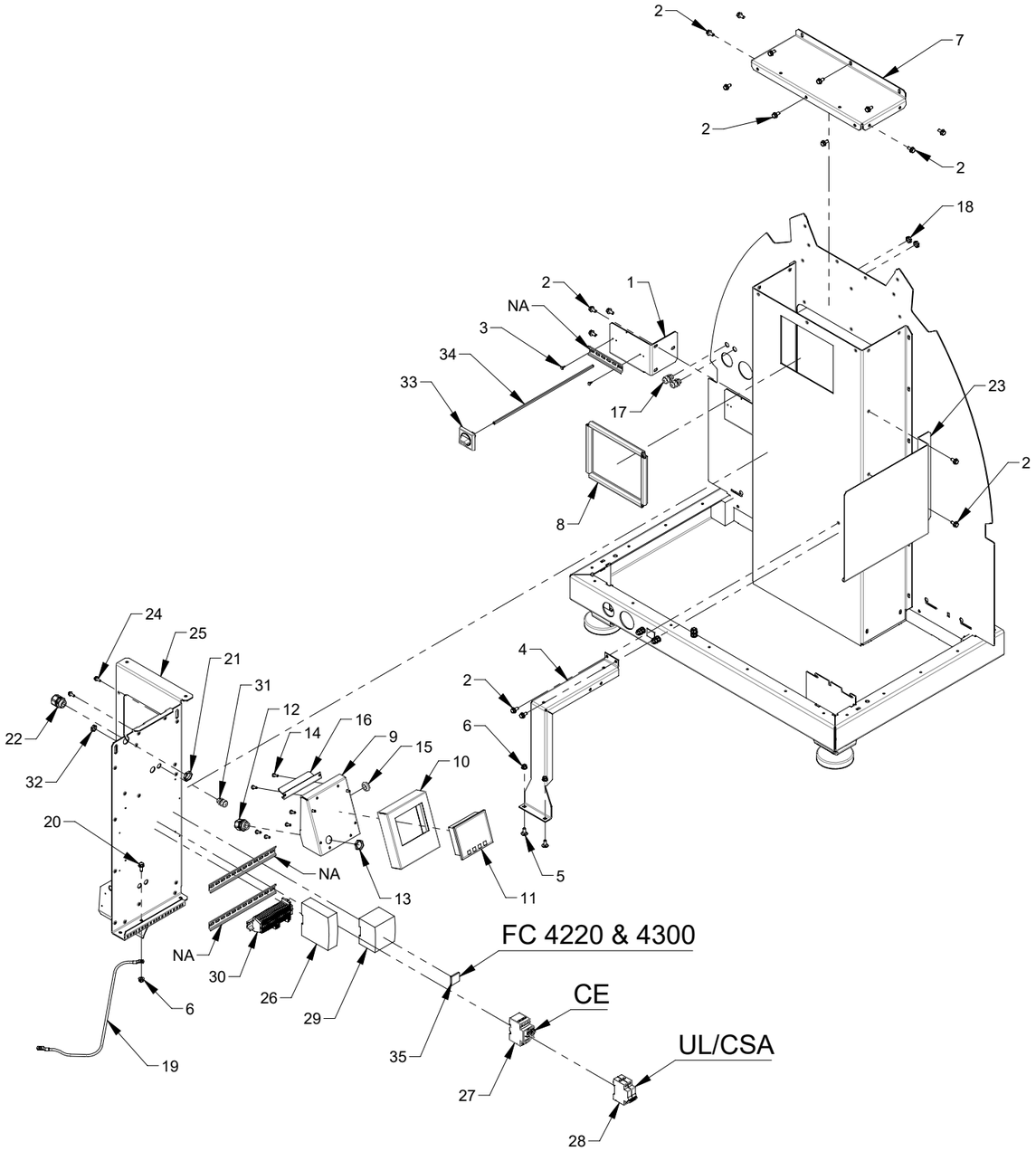

Pos.	Pcs.	Part no.	Description
1	1	123040213	Console for DIN rail
2	17	100323453	Thread cutting screw M8x16 DIN 7500D
3	2	100323449	M4x12
4	1	123040212	Console for vibration damper
5	2	100311040	Carriage bolt M8x20 DIN 603 St. 8.8
6	3	100316108	Flangenut with threadlock M8 DIN 6927 Elgv.
7	1	123040177	Lid for air duct
8	1	123040179	Sealing between air guide and control
9	1	123040231	Retainer for HMI box
10	1	123022251	Box for HMI assembled
11	1	100503329	Multiair FC HMI
12	1	100511182	Cable screw gland M25x1,5 plastic
13	1	100511191	Nut M25 x 1,5 plastic
14	8	100350038	Pan head screw M6x16 X30 stainless ISO 14583
15	1	100511253	Wire grommet. Ø22 x 2
16	1	123040234	Safety plate for HMI
17	2	100511244	Cable screw gland M16x1,5
18	2	100511245	Nut M16X1,5 plastic
19	1	123040218	Ground wire with terminal for control assembled
20	1	100323380	Flange set screw M8 x 20mm DIN 6921, elgalvanized
21	2	100511191	Nut M25 x 1,5 plastic
22	1	100511182	Cable screw gland M25x1,5 plastic
23	1	123040233	Shield for electrical parts
24	2	100323450	Thread cutting screw M6x16 DIN 7500D
25	1	123040208	Rear plate for control
26	1	100503349	Trafo 120W-24V
27	1	100503392	Protection 1,0-1,6A
28	1	100503393	Protection 6A UL/CSA
29	1	100503376	FC/FCE 4000 PLC
30	1	123022325	I/O terminal
31	1	100511244	Cable screw gland M16x1,5
32	1	100511245	Nut M16X1,5 plastic
33	1	100503366	Handle for Main switch
34	1	100503381	Main switch handle extension
35	1	100503331	Siemens Modbus modul

123040901-16-17 Revision 01

FC 4220 CE

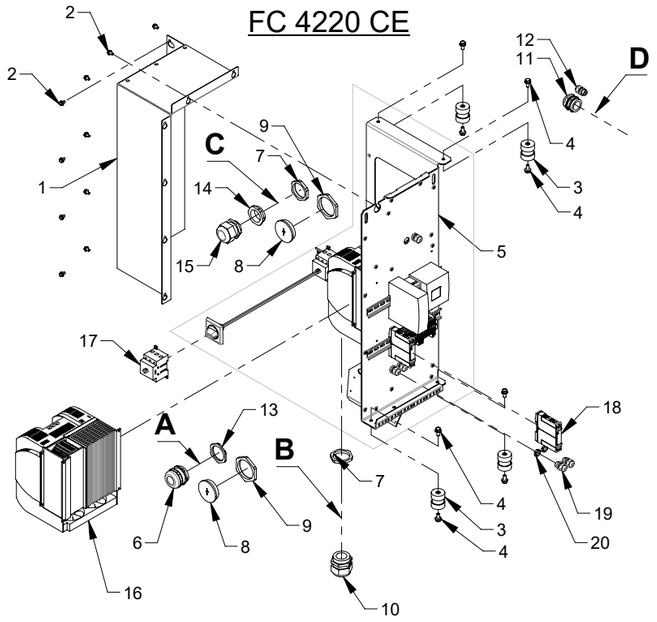

FC 4300 CE

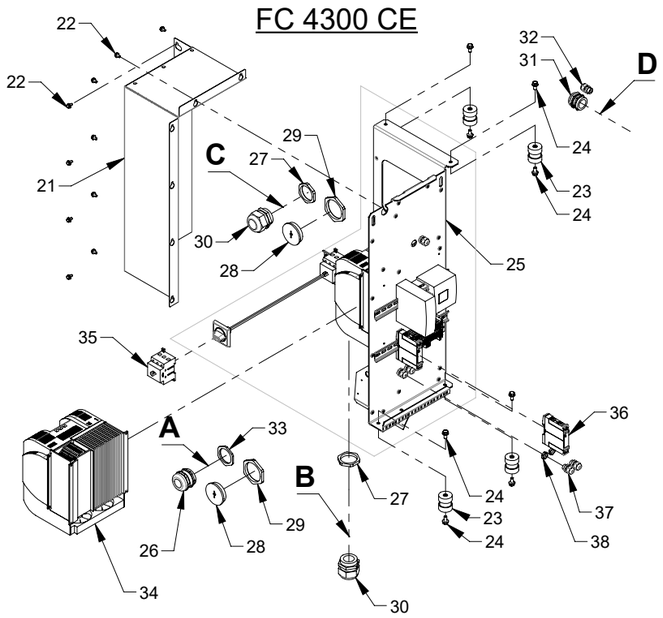

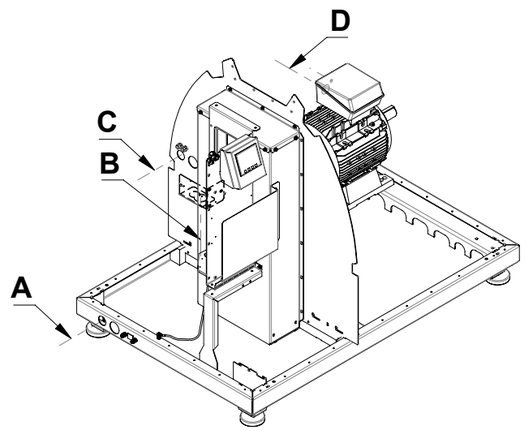

Pos.	Pcs.	Part no.	Description
1	1	123040209	Cover for Siemens V20 size FSE
2	10	100323460	Thread forming flange screw M6x10 DIN 7500D, elgalvanized
3	4	100323448	Vibration damper
4	8	100323387	Flange set screw M8x16 DIN 6921
5	1	123040240	FC 4220 Control, 3x380V-480V 50/60Hz CE
6	1	100511202	Cable screw gland M50x1,5 Ø24-Ø35 metal
7	2	100511270	Nut M50x1,5 plastic
8	2	100511272	Blind plug M63x1,5 plastic
9	2	100511271	Nut M63x1,5 plastic
10	1	100511184	Cable screw gland M50x1,5 Ø24-Ø32 plastic
11	1	100511235	Cable screw gland M40x1,5 EMC
12	1	100511244	Cable screw gland M16x1,5
13	1	100511257	Nut M50x1,5 metal
14	1	100511268	Reduction M50x1,5/M40x1,5
15	1	100511190	Cable screw gland M40x1,5
16	1	100503335	FC/FCE 4220 Frequency Converter
17	1	100503382	Main switch 63A
18	1	100503337	Siemens 3RN2000-1AA30
19	2	100511244	Cable screw gland M16x1,5
20	2	100511245	Nut M16X1,5 plastic
21	1	123040209	Cover for Siemens V20 size FSE
22	10	100323460	Thread forming flange screw M6x10 DIN 7500D, elgalvanized
23	4	100323448	Vibration damper
24	8	100323387	Flange set screw M8x16 DIN 6921
25	1	123040241	FC 4300 Control, 3x380V-480V 50/60Hz CE
26	1	100511202	Cable screw gland M50x1,5 Ø24-Ø35 metal
27	2	100511270	Nut M50x1,5 plastic
28	2	100511272	Blind plug M63x1,5 plastic
29	2	100511271	Nut M63x1,5 plastic
30	2	100511184	Cable screw gland M50x1,5 Ø24-Ø32 plastic
31	1	100511235	Cable screw gland M40x1,5 EMC
32	1	100511244	Cable screw gland M16x1,5
33	1	100511257	Nut M50x1,5 metal
34	1	100503336	FC/FCE 4300 Frequency Converter
35	1	100503382	Main switch 63A
36	1	100503337	Siemens 3RN2000-1AA30
37	2	100511244	Cable screw gland M16x1,5
38	2	100511245	Nut M16X1,5 plastic
39	1	181004000	Software - MultiAir FC/FCE 4220 - Installation kit
40	1	181004010	Software - MultiAir FC/FCE 4300 - Installation kit

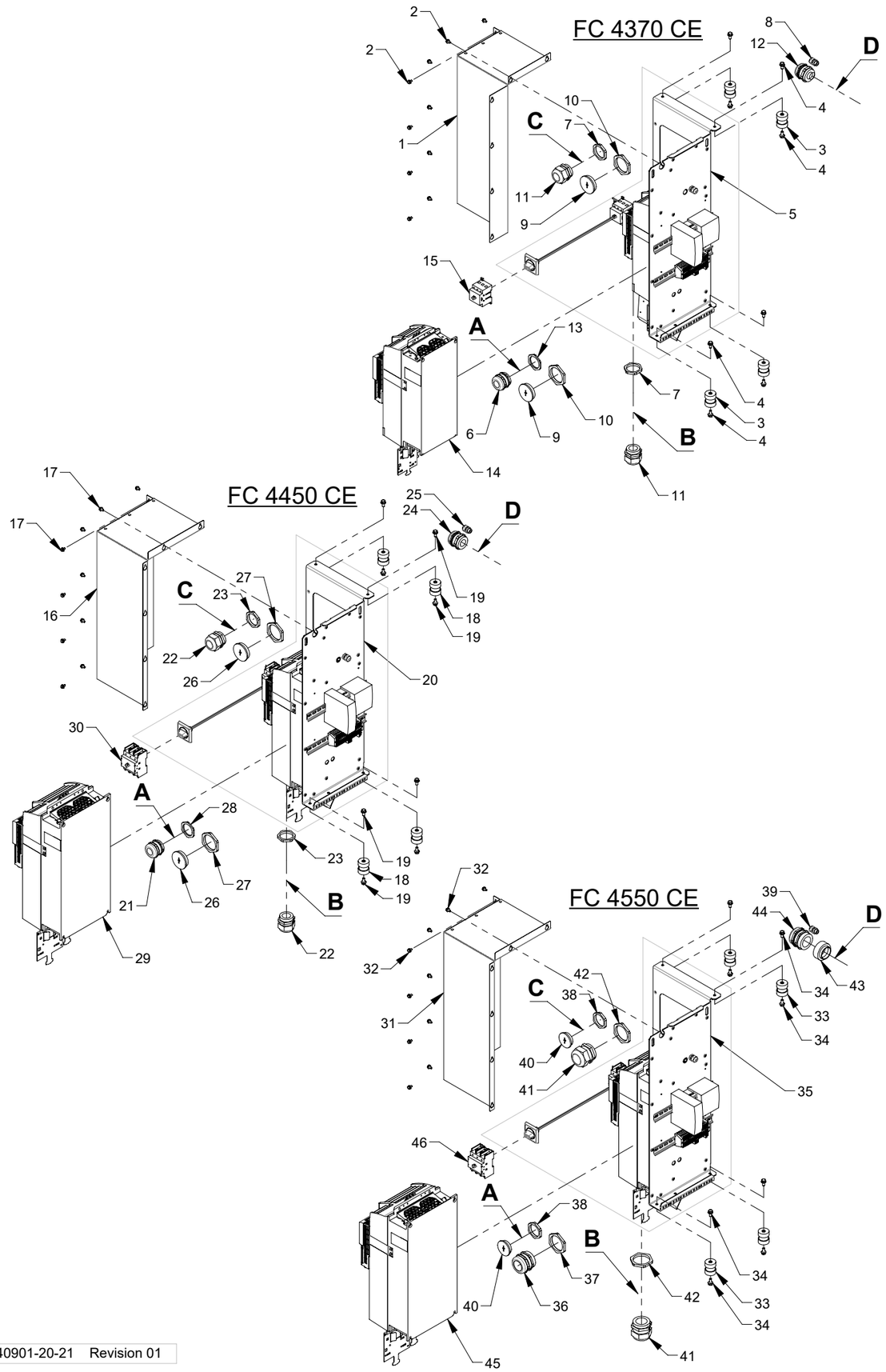

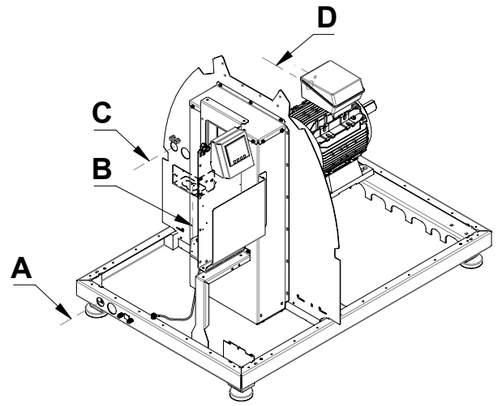

Pos.	Pcs.	Part no.	Description
1	1	123040210	Cover for Siemens G120X size FSD
2	10	100323460	Thread forming flange screw M6x10 DIN 7500D, elgalvanized
3	4	100323455	Vibration damper Ø40x54
4	8	100323387	Flange set screw M8x16 DIN 6921
5	1	123040242	FC 4370 Control, 3x380V-480V 50/60Hz CE Complete
6	1	100511202	Cable screw gland M50x1,5 Ø24-Ø35 metal
7	2	100511270	Nut M50x1,5 plastic
8	1	100511244	Cable screw gland M16x1,5
9	2	100511272	Blind plug M63x1,5 plastic
10	2	100511271	Nut M63x1,5 plastic
11	2	100511184	Cable screw gland M50x1,5 Ø24-Ø32 plastic
12	1	100511237	Cable screw gland M50x1,5 EMC
13	1	100511257	Nut M50x1,5 metal
14	1	100503377	FC/FCE 4370 Frequency Converter
15	1	100503383	Main switch 80A
16	1	123040211	Cover for Siemens G120X size FSE
17	10	100323460	Thread forming flange screw M6x10 DIN 7500D, elgalvanized
18	4	100323455	Vibration damper Ø40x54
19	8	100323387	Flange set screw M8x16 DIN 6921
20	1	123040243	FC 4450 Control, 3x380V-480V 50/60Hz CE Complete
21	1	100511202	Cable screw gland M50x1,5 Ø24-Ø35 metal
22	2	100511184	Cable screw gland M50x1,5 Ø24-Ø32 plastic
23	2	100511270	Nut M50x1,5 plastic
24	1	100511237	Cable screw gland M50x1,5 EMC
25	1	100511244	Cable screw gland M16x1,5
26	2	100511272	Blind plug M63x1,5 plastic
27	2	100511271	Nut M63x1,5 plastic
28	1	100511257	Nut M50x1,5 metal
29	1	100503378	FC/FCE 4450 Frequency Converter
30	1	100503384	Main switch 100A
31	1	123040211	Cover for Siemens G120X size FSE
32	10	100323460	Thread forming flange screw M6x10 DIN 7500D, elgalvanized
33	4	100323455	Vibration damper Ø40x54
34	8	100323387	Flange set screw M8x16 DIN 6921
35	1	123040244	FC 4550 Control, 3x380V-480V 50/60Hz CE Complete
36	1	100511203	Cable screw gland M63x1,5 Ø32-Ø42 metal
37	1	100511206	Nut M63x1,5 metal
38	2	100511270	Nut M50x1,5 plastic
39	1	100511244	Cable screw gland M16x1,5
40	2	100511275	Blind plug M50x1,5 plastic
41	2	100511276	Cable screw gland M63x1,5 Ø32-Ø42 plastic
42	2	100511271	Nut M63x1,5 plastic
43	1	100511277	Extension M50x1.5 - M63x1.5
44	1	100511278	Cable screw gland M63x1,5 Ø32-Ø42 EMC metal
45	1	100503379	FC/FCE 4550 Frequency Converter
46	1	100503385	Main switch 125A
47	1	181004020	Software - MultiAir FC/FCE 4370 - Installation kit
48	1	181004030	Software - MultiAir FC/FCE 4450 - Installation kit
49	1	181004040	Software - MultiAir FC/FCE 4550 - Installation kit

123040901-20-21 Revision 01

FC 4220 UL/CSA

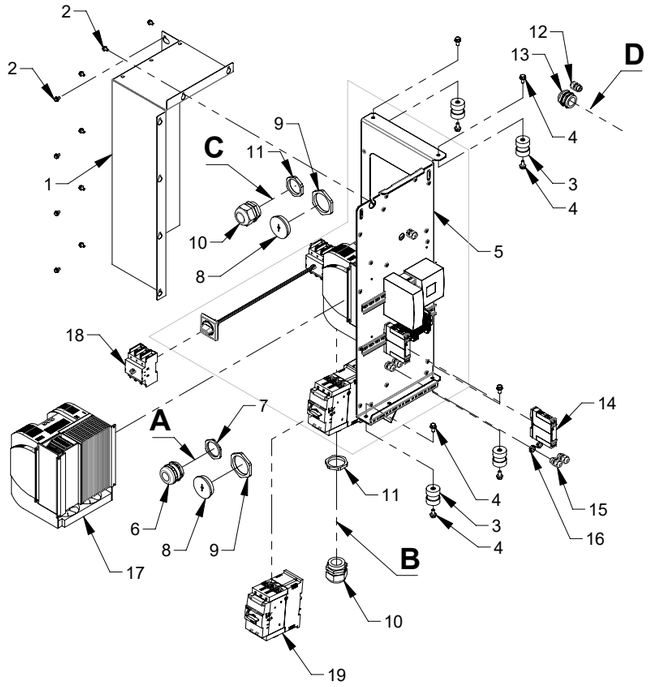

FC 4300 UL/CSA

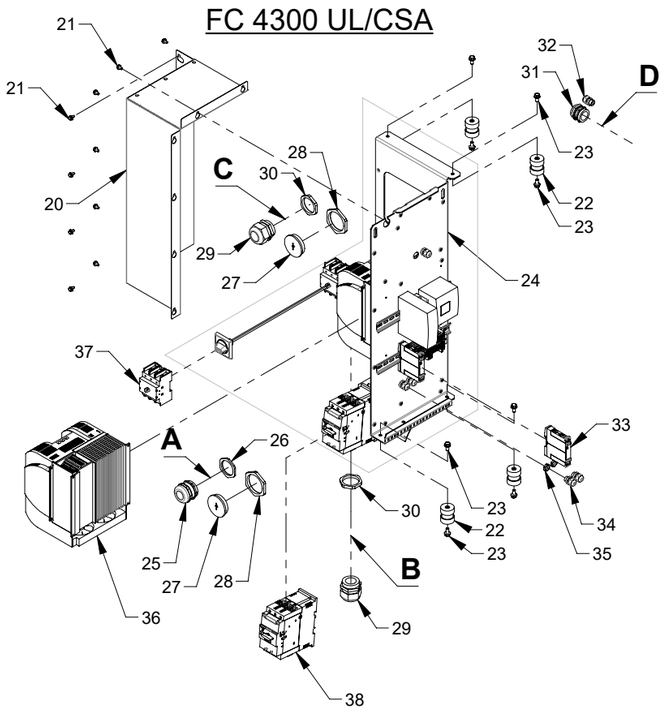

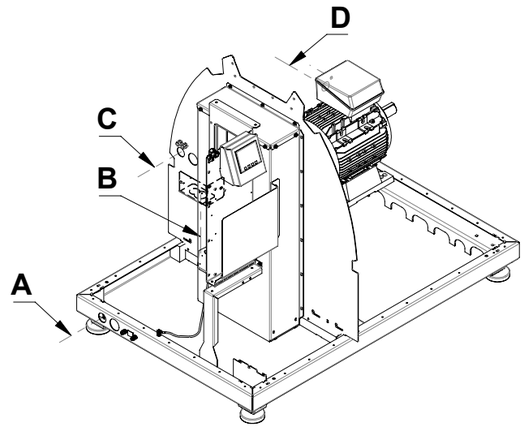

Pos.	Pcs.	Part no.	Description
1	1	123040209	Cover for Siemens V20 size FSE
2	10	100323460	Thread forming flange screw M6x10 DIN 7500D, elgalvanized
3	4	100323448	Vibration damper
4	8	100323387	Flange set screw M8x16 DIN 6921
5	1	123040250	FC 4220 Control, 3x380V-480V 50/60Hz UL/CSA
6	1	100511202	Cable screw gland M50x1,5 Ø24-Ø35 metal
7	1	100511257	Nut M50x1,5 metal
8	2	100511272	Blind plug M63x1,5 plastic
9	2	100511271	Nut M63x1,5 plastic
10	2	100511184	Cable screw gland M50x1,5 Ø24-Ø32 plastic
11	2	100511270	Nut M50x1,5 plastic
12	1	100511244	Cable screw gland M16x1,5
13	1	100511235	Cable screw gland M40x1,5 EMC
14	1	100503337	Siemens 3RN2000-1AA30
15	2	100511244	Cable screw gland M16x1,5
16	2	100511245	Nut M16X1,5 plastic
17	1	100503335	FC/FCE 4220 Frequency Converter
18	1	100503384	Main switch 100A
19	1	100503387	FC/FCE 4220 Circuit breaker
20	1	123040209	Cover for Siemens V20 size FSE
21	10	100323460	Thread forming flange screw M6x10 DIN 7500D, elgalvanized
22	4	100323448	Vibration damper
23	8	100323387	Flange set screw M8x16 DIN 6921
24	1	123040251	FC 4300 Control, 3x380V-480V 50/60Hz UL/CSA
25	1	100511202	Cable screw gland M50x1,5 Ø24-Ø35 metal
26	1	100511257	Nut M50x1,5 metal
27	2	100511272	Blind plug M63x1,5 plastic
28	2	100511271	Nut M63x1,5 plastic
29	2	100511184	Cable screw gland M50x1,5 Ø24-Ø32 plastic
30	2	100511270	Nut M50x1,5 plastic
31	1	100511235	Cable screw gland M40x1,5 EMC
32	1	100511244	Cable screw gland M16x1,5
33	1	100503337	Siemens 3RN2000-1AA30
34	2	100511244	Cable screw gland M16x1,5
35	2	100511245	Nut M16X1,5 plastic
36	1	100503336	FC/FCE 4300 Frequency Converter
37	1	100503384	Main switch 100A
38	1	100503388	FC/FCE 4300 Circuit breaker
39	1	181004000	Software - MultiAir FC/FCE 4220 - Installation kit
40	1	181004010	Software - MultiAir FC/FCE 4300 - Installation kit

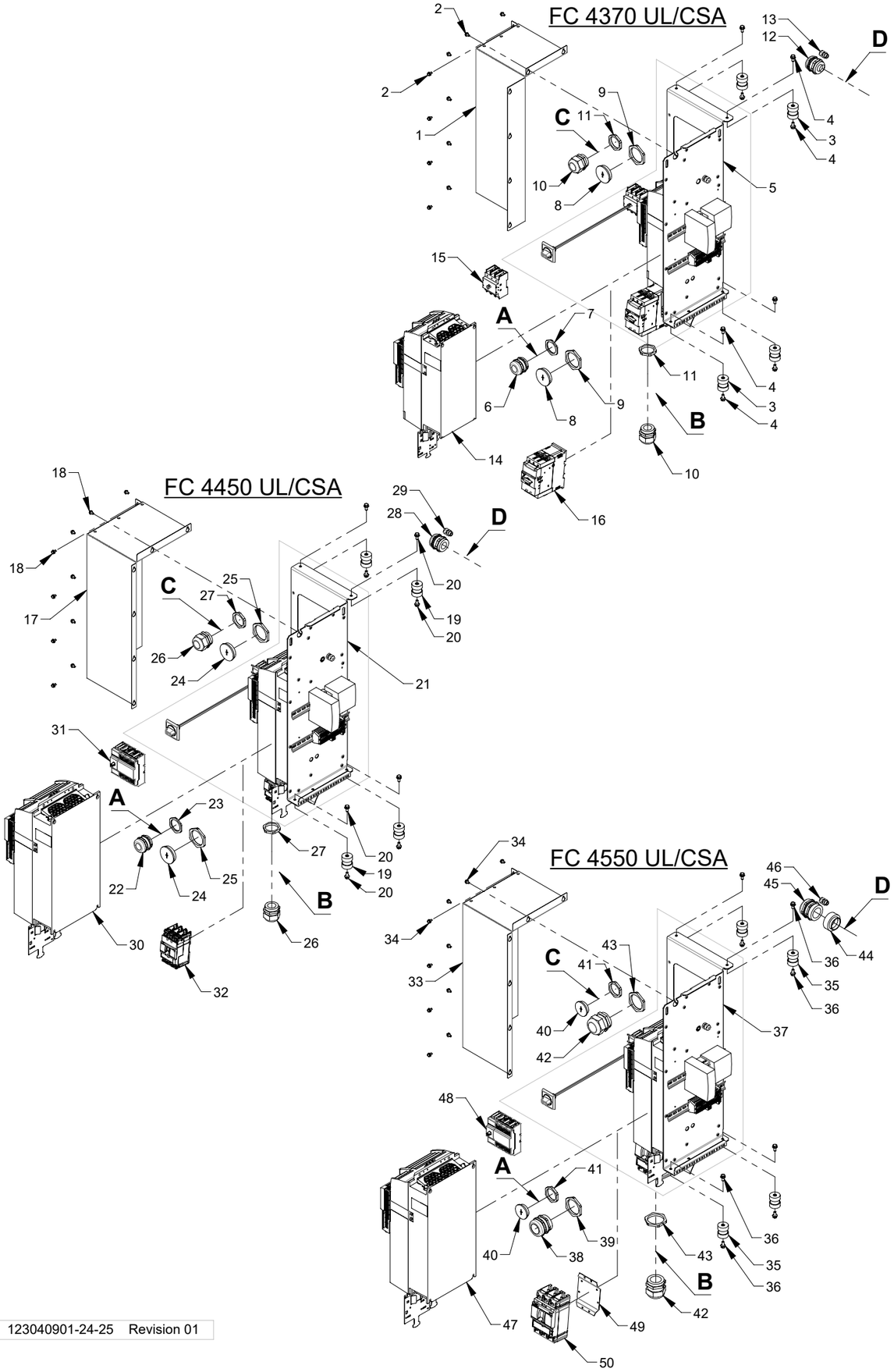

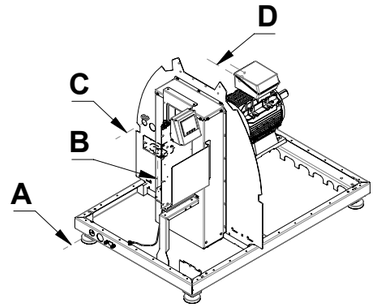

KONGSKILDE
Air solutions / your success

Pos.	Pcs.	Part no.	Description
1	1	123040210	Cover for Siemens G120X size FSD
2	10	100323460	Thread forming flange screw M6x10 DIN 7500D, elgalvanized
3	4	100323455	Vibration damper Ø40x54
4	8	100323387	Flange set screw M8x16 DIN 6921
5	1	123040252	FC 4370 Control, 3x380V-480V 50/60Hz UL/CSA
6	1	100511202	Cable screw gland M50x1,5 Ø24-Ø35 metal
7	1	100511257	Nut M50x1,5 metal
8	2	100511272	Blind plug M63x1,5 plastic
9	2	100511271	Nut M63x1,5 plastic
10	2	100511184	Cable screw gland M50x1,5 Ø24-Ø32 plastic
11	2	100511270	Nut M50x1,5 plastic
12	1	100511237	Cable screw gland M50x1,5 EMC
13	1	100511244	Cable screw gland M16x1,5
14	1	100503377	FC/FCE 4370 Frequency Converter
15	1	100503384	Main switch 100A
16	1	100503389	FC/FCE 4370 Circuit breaker
17	1	123040211	Cover for Siemens G120X size FSE
18	10	100323460	Thread forming flange screw M6x10 DIN 7500D, elgalvanized
19	4	100323455	Vibration damper Ø40x54
20	8	100323387	Flange set screw M8x16 DIN 6921
21	1	123040253	FC 4450 Control, 3x380V-480V 50/60Hz UL/CSA
22	1	100511202	Cable screw gland M50x1,5 Ø24-Ø35 metal
23	1	100511257	Nut M50x1,5 metal
24	2	100511272	Blind plug M63x1,5 plastic
25	2	100511271	Nut M63x1,5 plastic
26	2	100511184	Cable screw gland M50x1,5 Ø24-Ø32 plastic
27	2	100511270	Nut M50x1,5 plastic
28	1	100511237	Cable screw gland M50x1,5 EMC
29	1	100511244	Cable screw gland M16x1,5
30	1	100503378	FC/FCE 4450 Frequency Converter
31	1	100503386	Main switch 160A
32	1	100503390	FC/FCE 4450 Circuit breaker
33	1	123040211	Cover for Siemens G120X size FSE
34	10	100323460	Thread forming flange screw M6x10 DIN 7500D, elgalvanized
35	4	100323455	Vibration damper Ø40x54
36	8	100323387	Flange set screw M8x16 DIN 6921
37	1	123040254	FC 4550 Control, 3x380V-480V 50/60Hz UL/CSA
38	1	100511203	Cable screw gland M63x1,5 Ø32-Ø42 metal
39	1	100511206	Nut M63x1,5 metal
40	2	100511275	Blind plug M50x1,5 plastic
41	2	100511270	Nut M50x1,5 plastic
42	2	100511276	Cable screw gland M63x1,5 Ø32-Ø42 plastic
43	2	100511271	Nut M63x1,5 plastic
44	1	100511277	Extension M50x1.5 - M63x1.5
45	1	100511278	Cable screw gland M63x1,5 Ø32-Ø42 EMC metal
46	1	100511244	Cable screw gland M16x1,5
47	1	100503379	FC/FCE 4550 Frequency Converter
48	1	100503386	Main switch 160A
49	1	123040214	Mounting bracket for 55kW circuit breaker
50	1	100503391	FC/FCE 4550 Circuit breaker
51	1	181004020	Software - MultiAir FC/FCE 4370 - Installation kit
52	1	181004030	Software - MultiAir FC/FCE 4450 - Installation kit
53	1	181004040	Software - MultiAir FC/FCE 4550 - Installation kit

FCE 4220 CE & UL/CSA

FCE 4300 CE & UL/CSA

FCE 4370 CE & UL/CSA

FCE 4450 CE & UL/CSA

FCE 4550 CE & UL/CSA

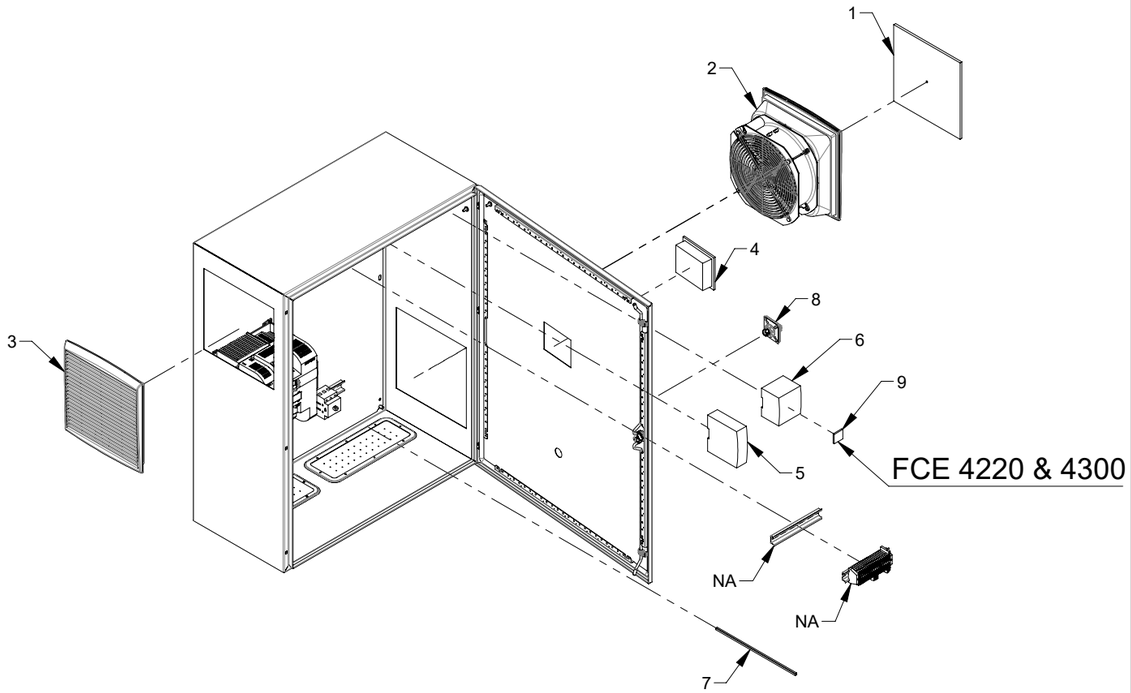

123040901-26-27 Revision

Pos.	Pcs.	Part no.	Description
1	1	100503404	Filter for inlet grille 316x336 mm, set of 5 pcs.
2	1	100503403	Ventilator 68W 230V 50/60Hz with filter, for control box
3	1	100503402	Intlet grille 291x291mm with filter, for control box
4	1	100503329	Multiair FC HMI
5	1	100503349	Trafo 120W-24V
6	1	100503376	FC/FCE 4000 PLC
7	1	100503405	Main switch handle extension
8	1	100503366	Handle for Main switch
9	1	100503331	Siemens Modbus modul

123040901-26-27 Revision

FCE 4300 CE

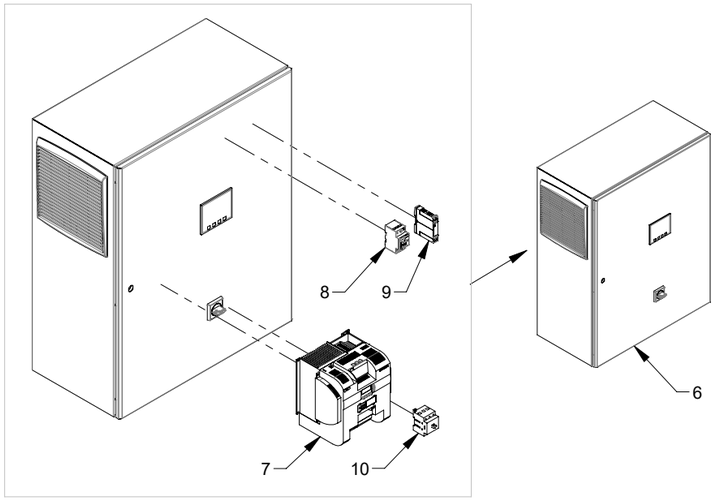

FCE 4220 CE

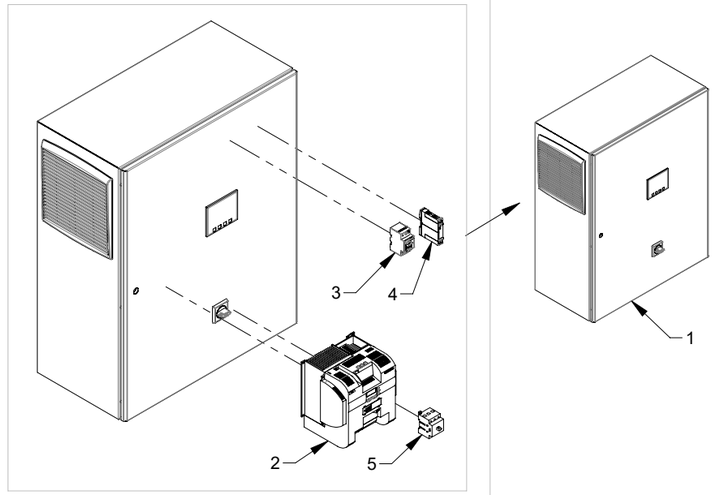

FCE 4450 CE

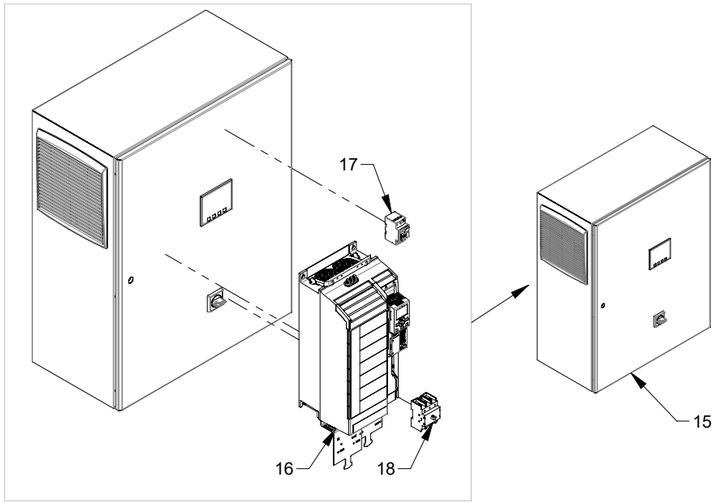

FCE 4370 CE

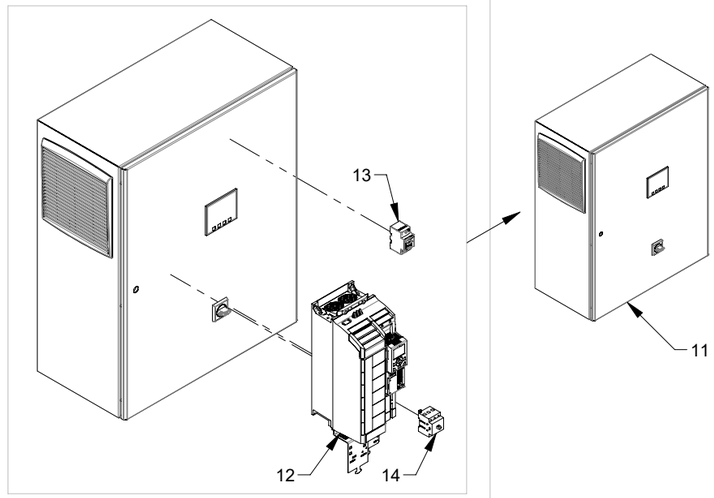

FCE 4550 CE

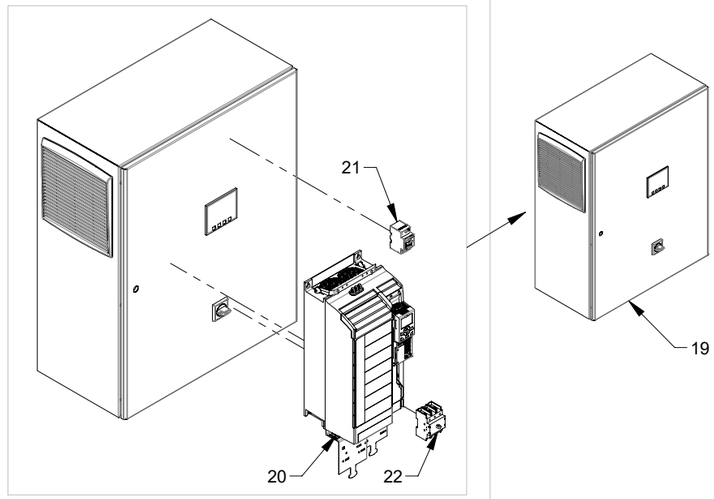

Pos.	Pcs.	Part no.	Description
1	1	100503603	Control cabinet with freq. converter 22kW 3x380-480V 50/60Hz CE
2	1	100503335	FC/FCE 4220 Frequency Converter
3	1	100503392	Protection 1,0-1,6A
4	1	100503337	Siemens 3RN2000-1AA30
5	1	100503382	Main switch 63A
6	1	100503604	Control cabinet with freq. converter 30kW 3x380-480V 50/60Hz CE
7	1	100503336	FC/FCE 4300 Frequency Converter
8	1	100503392	Protection 1,0-1,6A
9	1	100503337	Siemens 3RN2000-1AA30
10	1	100503382	Main switch 63A
11	1	100503605	Control cabinet with freq. converter 37kW 3x380-480V 50/60Hz CE
12	1	100503377	FC/FCE 4370 Frequency Converter
13	1	100503392	Protection 1,0-1,6A
14	1	100503383	Main switch 80A
15	1	100503606	Control cabinet with freq. converter 45kW 3x380-480V 50/60Hz CE
16	1	100503378	FC/FCE 4450 Frequency Converter
17	1	100503392	Protection 1,0-1,6A
18	1	100503384	Main switch 100A
19	1	100503607	Control cabinet with freq. converter 55kW 3x380-480V 50/60Hz CE
20	1	100503378	FC/FCE 4450 Frequency Converter
21	1	100503392	Protection 1,0-1,6A
22	1	100503385	Main switch 125A

123040901-28-29 Revision 01

FCE 4300 UL/CSA

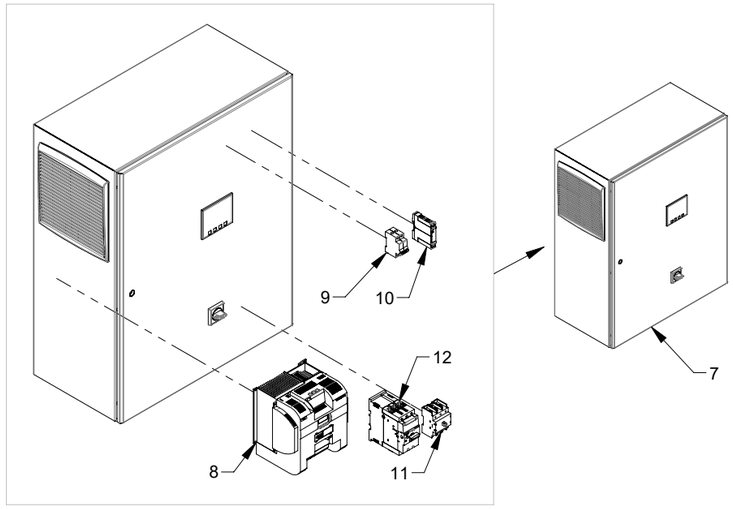

FCE 4220 UL/CSA

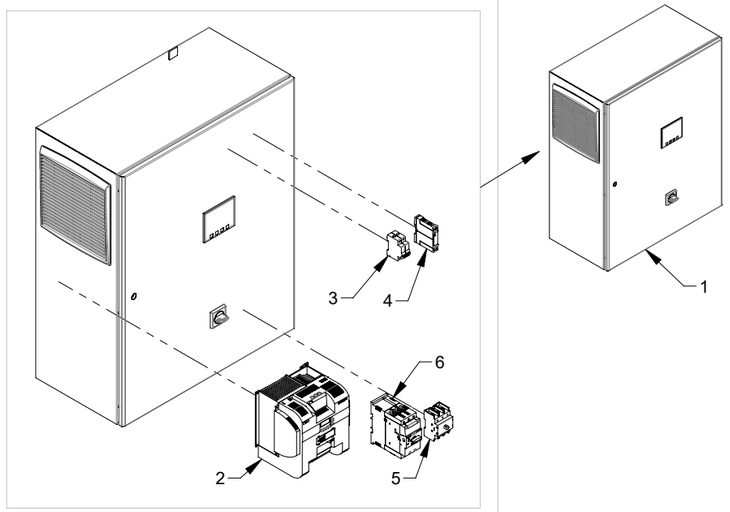

FCE 4370 UL/CSA

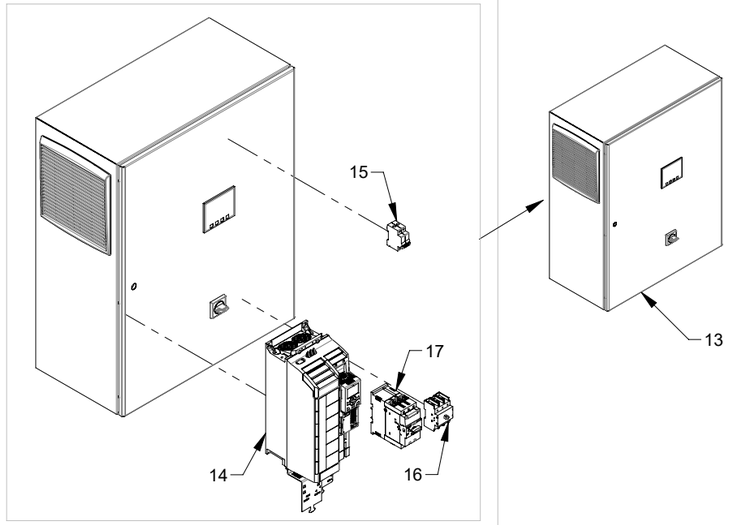

FCE 4450 UL/CSA

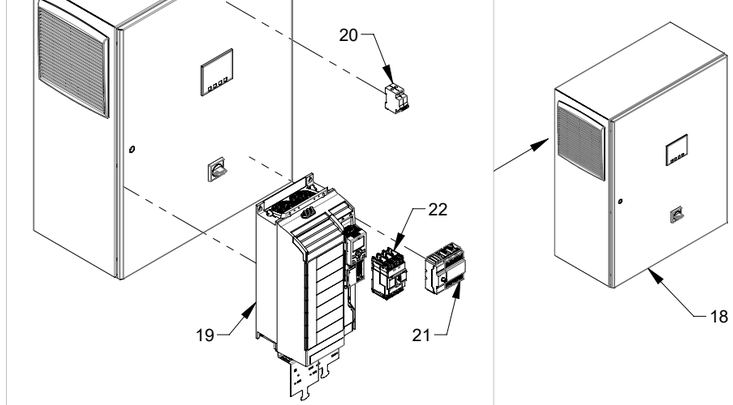

FCE 4550 UL/CSA

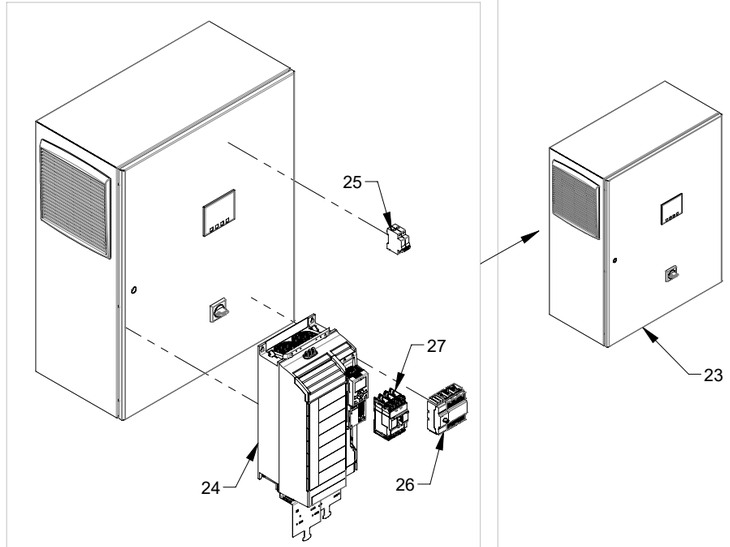

Pos.	Pcs.	Part no.	Description
1	1	100503608	Control cabinet with freq. converter 22kW 3x380-480V 50/60Hz UL/CSA
2	1	100503335	FC/FCE 4220 Frequency Converter
3	1	100503393	Protection 6A UL/CSA
4	1	100503337	Siemens 3RN2000-1AA30
5	1	100503384	Main switch 100A
6	1	100503387	FC/FCE 4220 Circuit breaker
7	1	100503609	Control cabinet with freq. converter 30kW 3x380-480V 50/60Hz UL/CSA
8	1	100503335	FC/FCE 4220 Frequency Converter
9	1	100503393	Protection 6A UL/CSA
10	1	100503337	Siemens 3RN2000-1AA30
11	1	100503384	Main switch 100A
12	1	100503387	FC/FCE 4220 Circuit breaker
13	1	100503610	Control cabinet with freq. converter 37kW 3x380-480V 50/60Hz UL/CSA
14	1	100503377	FC/FCE 4370 Frequency Converter
15	1	100503393	Protection 6A UL/CSA
16	1	100503384	Main switch 100A
17	1	100503387	FC/FCE 4220 Circuit breaker
18	1	100503611	Control cabinet with freq. converter 45kW 3x380-480V 50/60Hz UL/CSA
19	1	100503378	FC/FCE 4450 Frequency Converter
20	1	100503393	Protection 6A UL/CSA
21	1	100503386	Main switch 160A
22	1	100503390	FC/FCE 4450 Circuit breaker
23	1	100503612	Control cabinet with freq. converter 55kW 3x380-480V 50/60Hz UL/CSA
24	1	100503378	FC/FCE 4450 Frequency Converter
25	1	100503393	Protection 6A UL/CSA
26	1	100503386	Main switch 160A
27	1	100503390	FC/FCE 4450 Circuit breaker

123040901-30-31 Revision 01

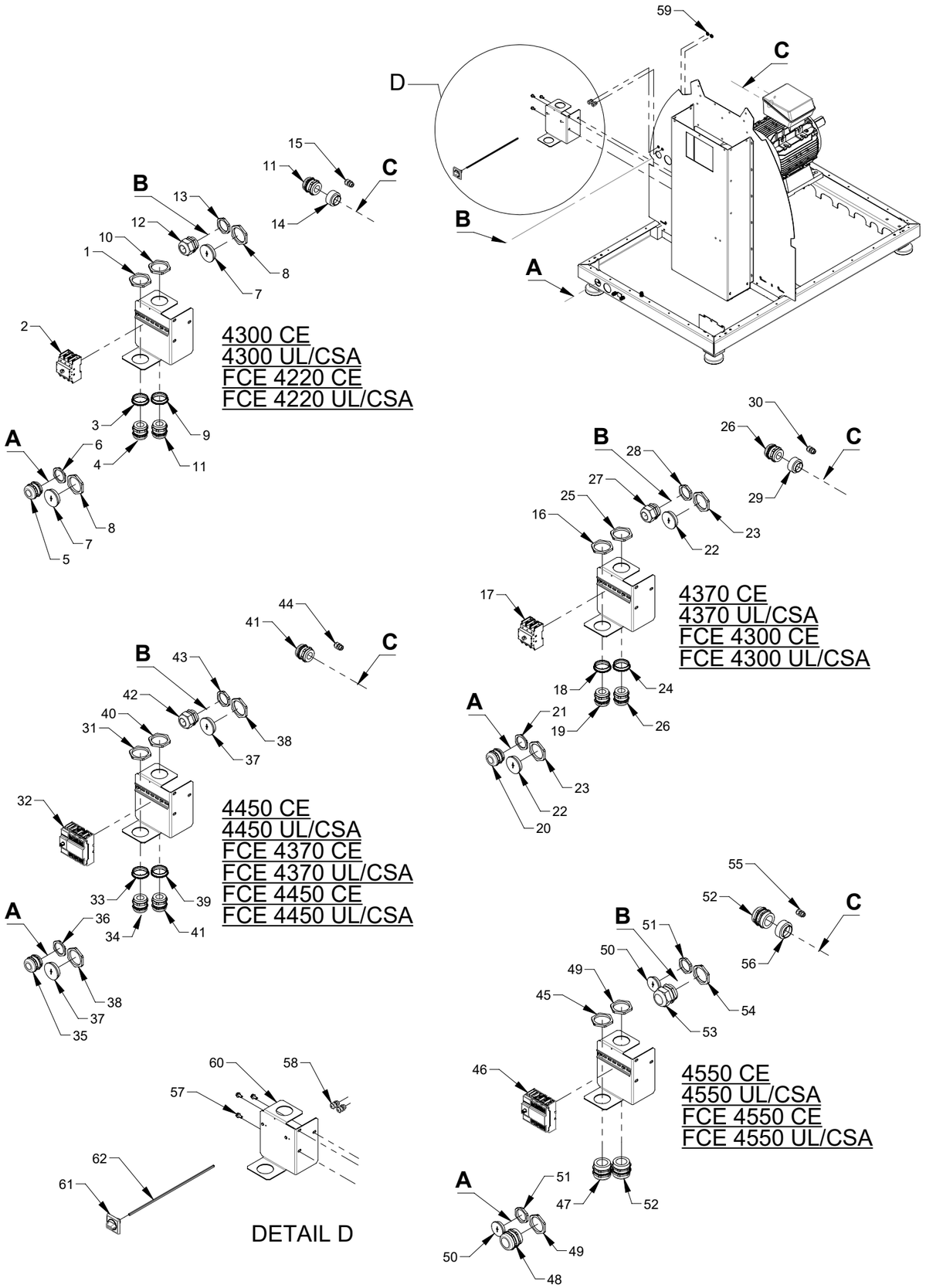

KONGSKILDE
Air solutions / your success

Pos.	Pcs.	Part no.	Description
1	1	100511206	Nut M63x1,5 metal
2	1	100503384	Main switch 100A
3	1	100511205	Reduction M63x1,5-M50x1,5
4	1	100511237	Cable screw gland M50x1,5 EMC
5	1	100511202	Cable screw gland M50x1,5 Ø24-Ø35 metal
6	1	100511257	Nut M50x1,5 metal
7	2	100511272	Blind plug M63x1,5 plastic
8	2	100511271	Nut M63x1,5 plastic
9	1	100511205	Reduction M63x1,5-M50x1,5
10	1	100511206	Nut M63x1,5 metal
11	2	100511237	Cable screw gland M50x1,5 EMC
12	1	100511184	Cable screw gland M50x1,5 Ø24-Ø32 plastic
13	1	100511270	Nut M50x1,5 plastic
14	1	100511279	Extension M40x1.5 - M50x1.5
15	1	100511244	Cable screw gland M16x1,5
16	1	100511206	Nut M63x1,5 metal
17	1	100503384	Main switch 100A
18	1	100511205	Reduction M63x1,5-M50x1,5
19	1	100511237	Cable screw gland M50x1,5 EMC
20	1	100511202	Cable screw gland M50x1,5 Ø24-Ø35 metal
21	1	100511257	Nut M50x1,5 metal
22	2	100511272	Blind plug M63x1,5 plastic
23	2	100511271	Nut M63x1,5 plastic
24	1	100511205	Reduction M63x1,5-M50x1,5
25	1	100511206	Nut M63x1,5 metal
26	2	100511237	Cable screw gland M50x1,5 EMC
27	1	100511184	Cable screw gland M50x1,5 Ø24-Ø32 plastic
28	1	100511270	Nut M50x1,5 plastic
29	1	100511279	Extension M40x1.5 - M50x1.5
30	1	100511244	Cable screw gland M16x1,5
31	1	100511206	Nut M63x1,5 metal
32	1	100503386	Main switch 160A
33	1	100511205	Reduction M63x1,5-M50x1,5
34	1	100511237	Cable screw gland M50x1,5 EMC
35	1	100511202	Cable screw gland M50x1,5 Ø24-Ø35 metal
36	1	100511257	Nut M50x1,5 metal
37	2	100511272	Blind plug M63x1,5 plastic
38	2	100511271	Nut M63x1,5 plastic
39	1	100511205	Reduction M63x1,5-M50x1,5
40	1	100511206	Nut M63x1,5 metal
41	2	100511237	Cable screw gland M50x1,5 EMC
42	1	100511184	Cable screw gland M50x1,5 Ø24-Ø32 plastic
43	1	100511270	Nut M50x1,5 plastic
44	1	100511244	Cable screw gland M16x1,5
45	1	100511206	Nut M63x1,5 metal
46	1	100503386	Main switch 160A
47	1	100511278	Cable screw gland M63x1,5 Ø32-Ø42 EMC metal
48	1	100511203	Cable screw gland M63x1,5 Ø32-Ø42 metal
49	2	100511206	Nut M63x1,5 metal
50	2	100511275	Blind plug M50x1,5 plastic
51	2	100511270	Nut M50x1,5 plastic
52	2	100511278	Cable screw gland M63x1,5 Ø32-Ø42 EMC metal
53	1	100511276	Cable screw gland M63x1,5 Ø32-Ø42 plastic
54	1	100511271	Nut M63x1,5 plastic
55	1	100511244	Cable screw gland M16x1,5
56	1	100511277	Extension M50x1.5 - M63x1.5
57	3	100323453	Thread cutting screw M8x16 DIN 7500D
58	2	100511244	Cable screw gland M16x1,5
59	2	100511245	Nut M16X1,5 plastic
60	1	123040215	Consol for DIN rail
61	1	100503366	Handle for Main switch
62	1	100503381	Main switch handle extension

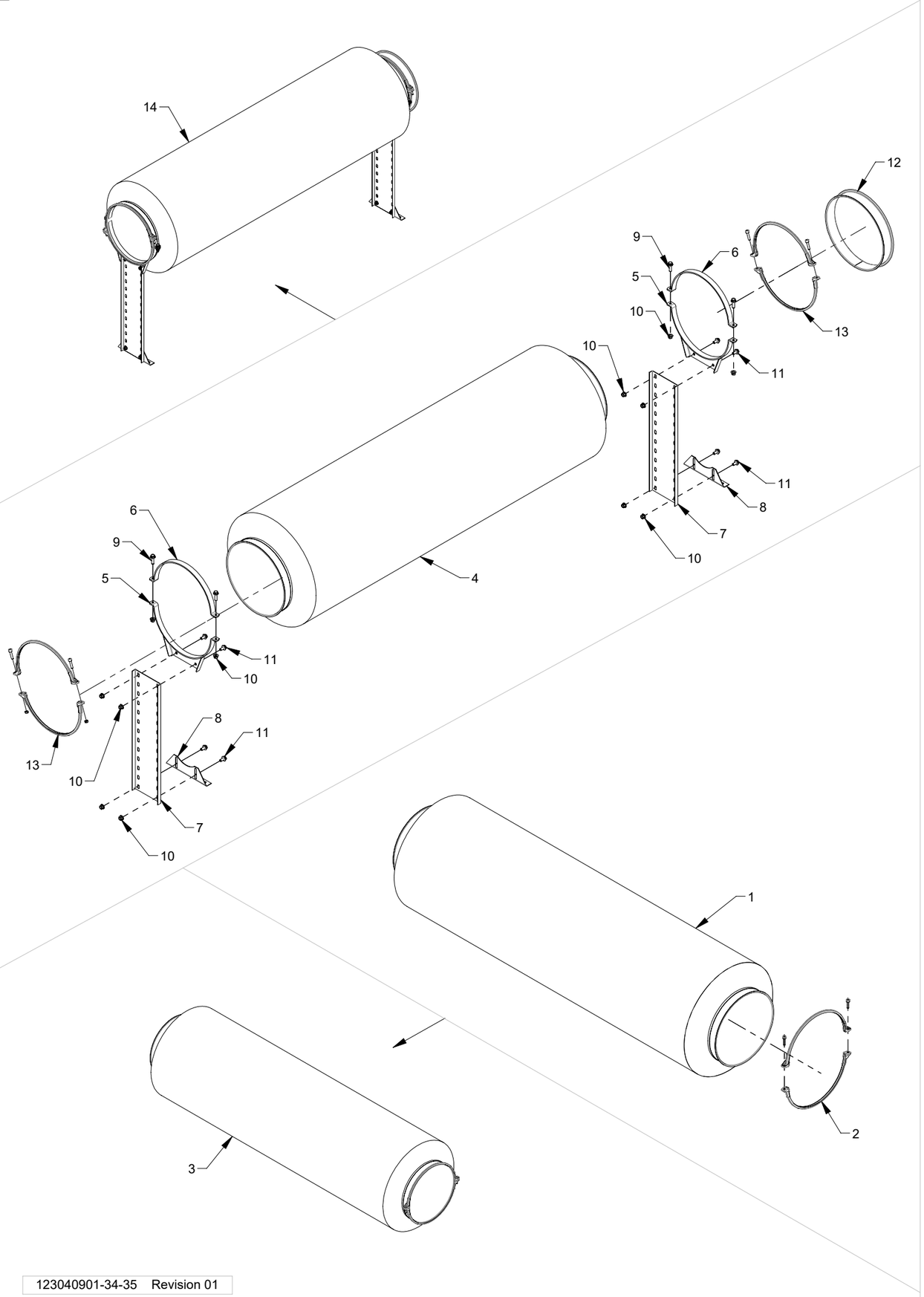

123040901-34-35 Revision 01

Pos.	Pcs.	Part no.	Description
1	1	9253740482	FK350 Pipe silencer 2,0m with perforered plate
2	1	125500331	FK 350 bolt clamp, wide, 2 mm, galvanized
3	1	123040057	MultiAir 4000 - intlet/outlet silencer
4	1	9253740482	FK350 Pipe silencer 2,0m with perforered plate
5	2	123040406	Support bracket for FK350 welded
6	2	123040409	Brace for FK350 pipe painted
7	2	123040410	Pipe support extension L=640(600)
8	2	122000364	Pipe support mounted Foot galv.
9	4	100308174	Flange set screw M10x35 DIN 6921, elgalvanized
10	12	100316102	Flangenut with threadlock M10 DIN 6927
11	8	100323439	Flange set screw M10x20 DIN 6921
12	1	123040411	Inlet grating welded
13	2	125500331	FK 350 bolt clamp, wide, 2 mm, galvanized
14	1	123040058	MultiAir 4000 silencer T-version

123040901-34-35 Revision 01

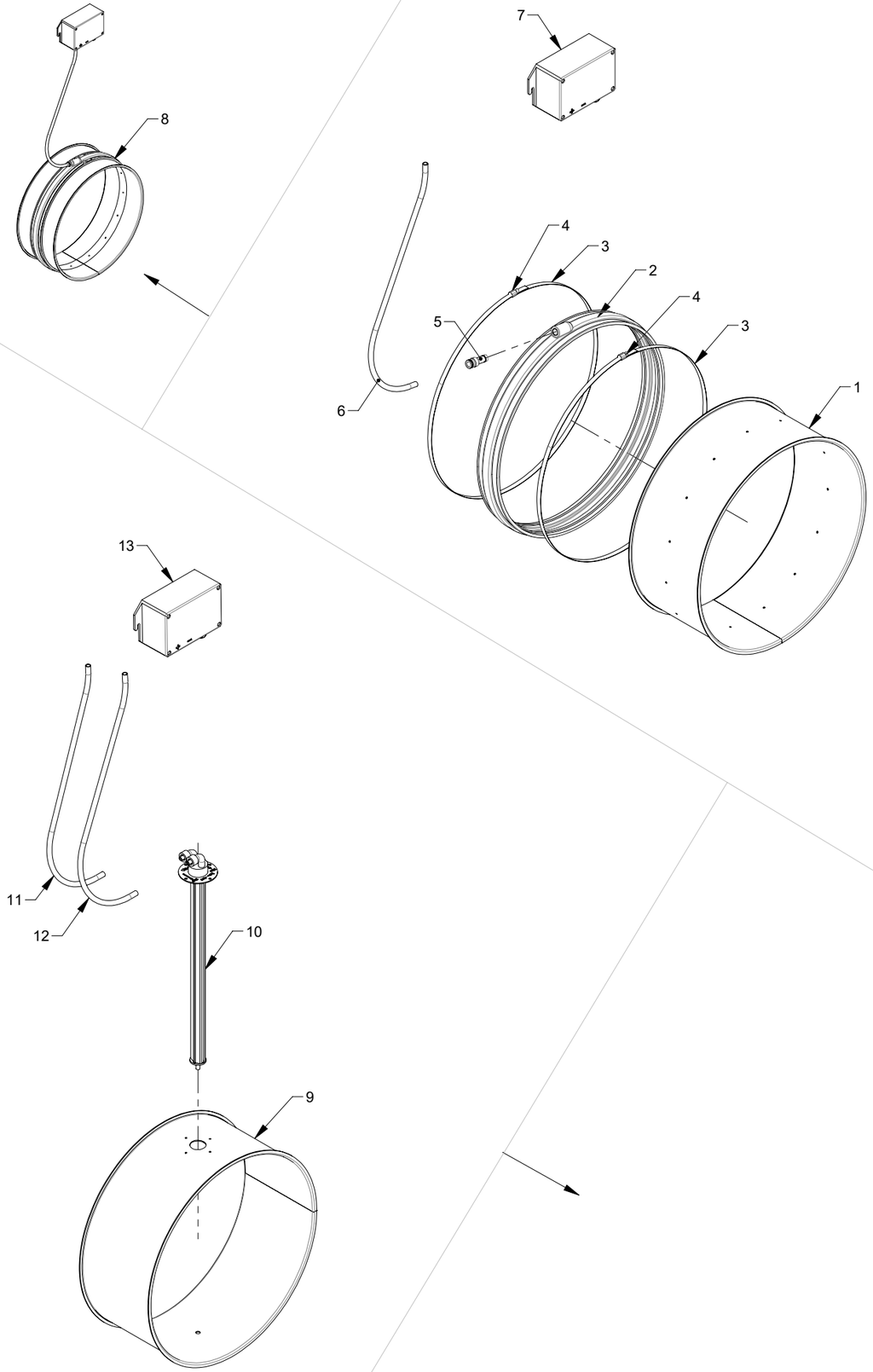

KONGSKILDE
Air solutions / your success

4000

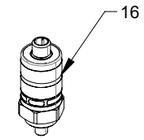

FC/FCE 4000

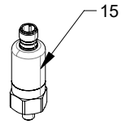

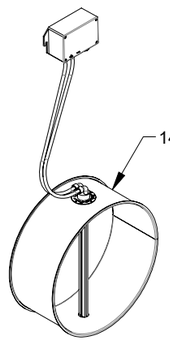

Pos.	Pcs.	Part no.	Description
1	1	123040400	Tube for pressure control kit
2	1	123040403	Rubber ring for pressure control kit
3	2	123040402	Straps for rubber ring
4	2	100420259	Lock for endless straps
5	1	100420257	Push-in reduction Ø8/Ø10
6	1	123040404	Pressure hose Ø8/Ø6mm, 4 meter
7	1	100503122	Pressure transmitter 404304/000-451-405-27-298/000
8	1	123040060	MultiAir FC/FCE 4000 pressure control kit
9	1	123040401	Tube for flow gauge
10	1	100503375	Flow sensor Micatrone MFS-C 350 including gasket and mounting screws
11	1	123040404	Pressure hose Ø8/Ø6mm, 4 meter
12	1	123040404	Pressure hose Ø8/Ø6mm, 4 meter
13	1	100503374	Flow transmitter 404304/000-414-405-27-298/000
14	1	123040061	MultiAir FC/FCE 4000 flow control kit
15	1	123040062	MultiAir FC/FCE 4000 Vibration sensor including wire
16	1	123040063	MultiAir 4000 Vibration sensor kit inclusive wire

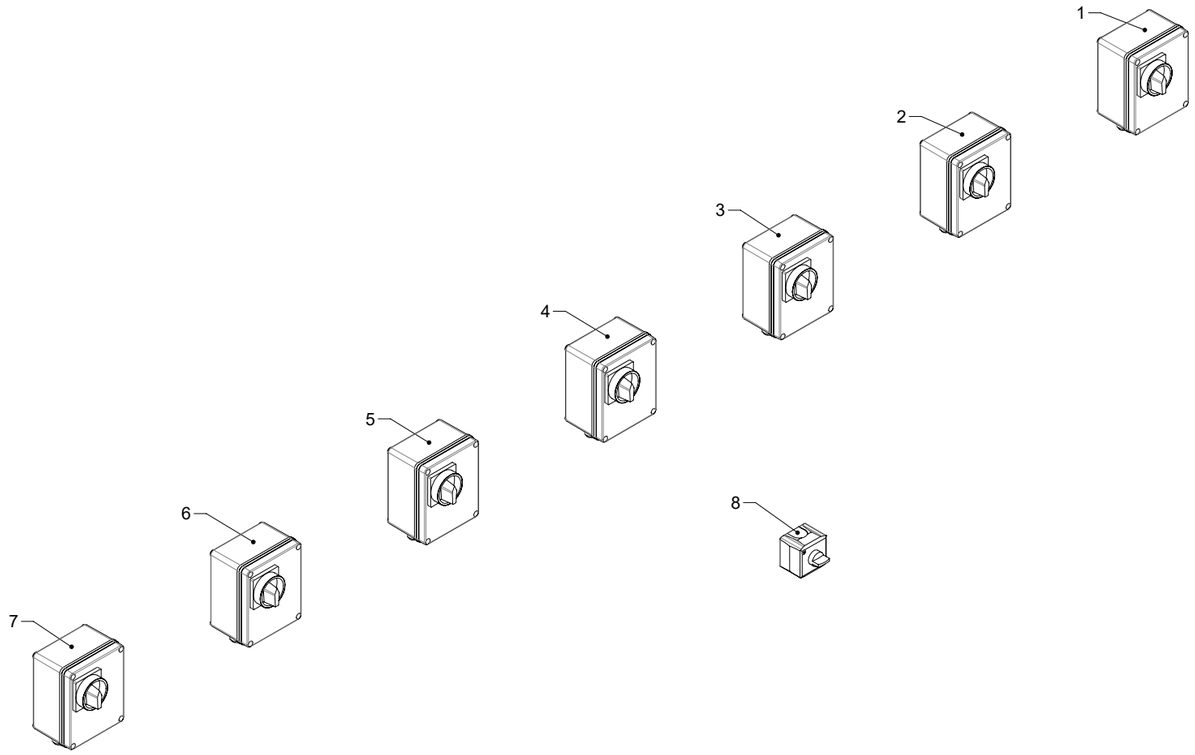

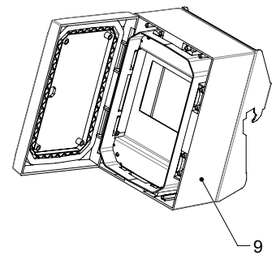

Pos.	Pcs.	Part no.	Description
1	1	100503338	External control 1,3A-1,7A 3x200V-600V 50/60Hz (0,55kW at 3x400V)
2	1	100503345	External control 1,7A-2,3A 3x200V-600V 50/60Hz (0,75kW at 3x400V)
3	1	100503341	External control 2,3A-3,1A 3x200V-600V 50/60Hz (1,1kW at 3x400V)
4	1	100503342	External control 3,1A-4,2A 3x200V-600V 50/60Hz (1,5kW at 3x400V)
5	1	100503339	External control 4,2A-5,7A 3x200V-600V 50/60Hz (2,2kW at 3x400V)
6	1	100503343	External control 5,7A-7,6A 3x200V-600V 50/60Hz (3kW at 3x400V)
7	1	100503340	External control 7,6A-10A 3x200V-600V 50/60Hz (4kW at 3x400V)
8	1	100503357	External start/stop switch with rotary knob 24V
9	1	123022262	Cabinet for HMI control outdoors

Kongskilde Industries A/S
Skælskørvej 64
DK - 4180 Sorø
Tel. +45 72 17 60 00
mail@kongskilde-industries.com
www.kongskilde-industries.com

KONGSKILDE
Air solutions / your success