Installation of universal oil lubrication system

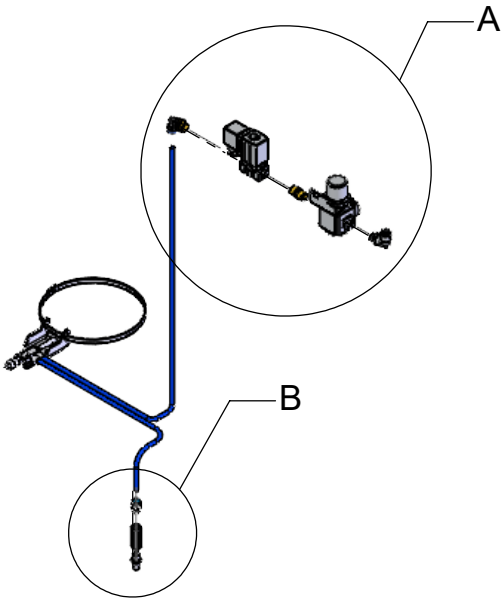

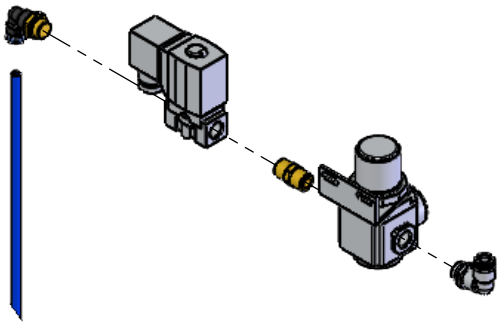

DETAIL A (1 : 5)

DETAIL B (1 : 2)

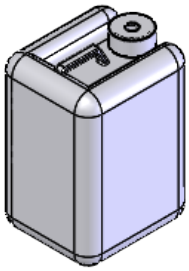

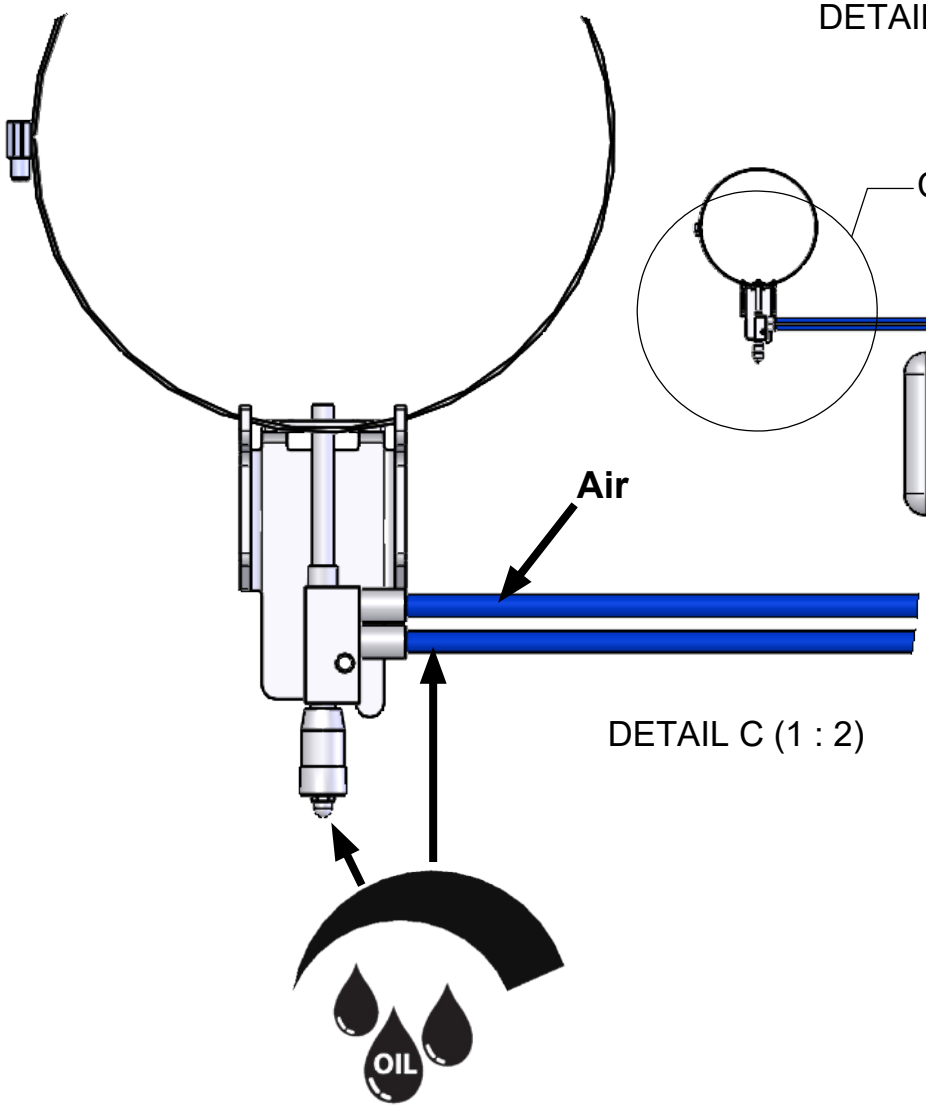

DETAIL C (1 : 2)

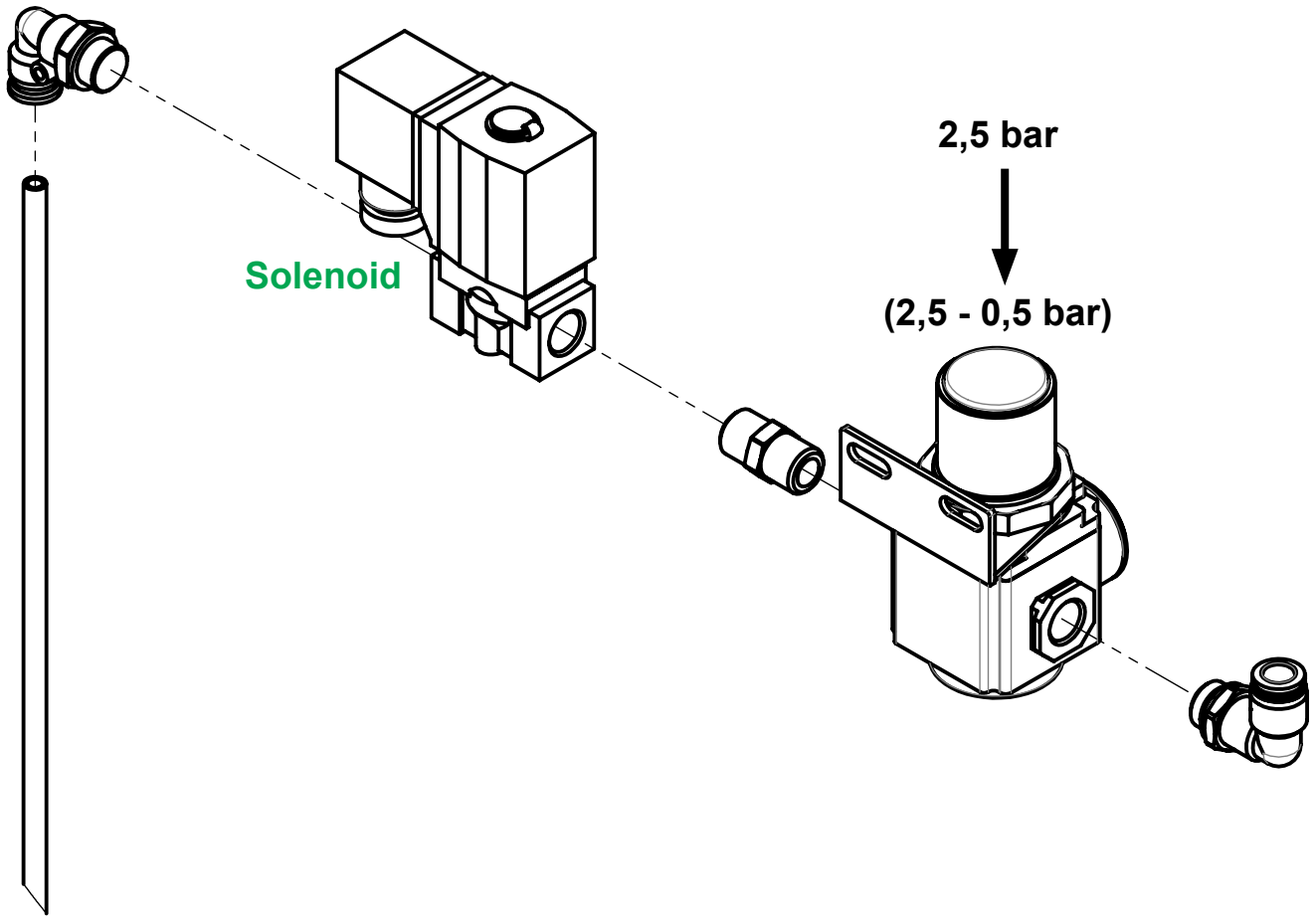
2,5 bar
(2,5 - 0,5 bar)
Solenoid